AMSCO

ILLUSTRATED PARTS BREAKDOWN

AMSCO BASIL® 6000 Series Tunnel Washer

(8/9/93) P-910000-020

Rev. 0

©1995, AMSCO All rights reserved.

Printed in U.S.A.

LIMITATIONS OF LIABILITY AND INDEMNITY

IN NO CASE, WHETHER AS A RESULT OF A BREACH OF CONTRACT, BREACH OF WARRANTY OR TORT (INCLUDING AMSCO'S OR CUSTOMER'S WILLFUL ACTS OR NEGLIGENCE OR STRICT LIABILITY) SHALL AMSCO OR CUSTOMER BE LIABLE TO THE OTHER FOR ANY CONSEQUENTIAL OR INCIDENTAL DAMAGES INCURRED BY THE OTHER, INCLUDING, BUT NOT LIMITED TO, LOSS OF REVENUE, PROFITS OR GOODWILL. HOWEVER, NOTHING CONTAINED IN THIS AGREEMENT IS INTENDED TO RELIEVE EITHER AMSCO OR CUSTOMER FROM CLAIMS, LIABILITY, DAMAGES OR EXPENSES RESULTING FROM BODILY INJURY, INCLUDING DEATH, OR FROM PROPERTY DAMAGE INCURRED DUE TO THE WILLFUL ACTS, THE NEGLIGENCE OF OR THE STRICT LIABILITY OF THAT PARTY.

AMSCO AGREES TO DEFEND, INDEMNIFY AND HOLD CUSTOMER HARMLESS FROM ANY AND ALL CLAIMS, LIABILITY, DAMAGES OR EXPENSES DUE TO PERSONAL INJURIES, INCLUDING DEATH, TO EMPLOYEES OF AMSCO AND CUSTOMER AND TO THIRD PARTIES AND FOR PROPERTY DAMAGE TO THE EXTENT OF THE WILLFUL ACTS OF THE NEGLIGENCE OF AMSCO OR THE STRICT LIABILITY OF AMSCO CAUSED BY THE ACTS OR OMISSIONS OF AMSCO. CUSTOMER AGREES TO DEFEND, INDEMNIFY AND HOLD AMSCO HARMLESS FROM ANY AND ALL CLAIMS, LIABILITY, DAMAGES OR EXPENSES DUE TO PERSONAL INJURIES, INCLUDING DEATH, TO EMPLOYEES OF CUSTOMER AND AMSCO AND TO THIRD PARTIES AND FROM PROPERTY DAMAGE TO THE EXTENT OF THE WILLFUL ACTS OR THE NEGLIGENCE OF CUSTOMER OR THE STRICT LIABILITY OF CUSTOMER CAUSED BY THE ACTS OR OMISSIONS OF CUSTOMER.

WARNING - COPYING PROHIBITED

This manual is protected by Federal Copyright Law, which provides for damages of up to $20,000, as well as criminal fines and imprisonment, for unauthorized copying.

INTRODUCTION

Significant assemblies and components of the Basil® 6000 Series Tunnel Washers are illustrated and identified in this manual. The part number, description and quantity required for each usage are given. Each indentation in the description represents the assembly level. The Units Per Assembly column is specific for the given assembly or subassembly level.

This manual is provided to AMSCO customers and AMSCO service technicians to enhance the ordering of maintenance parts for the Basil 6000 Series Tunnel Washers. To order maintenance parts or identify hardware not found in this manual, please call AMSCO Customer Service at (800) 333-8848 for assistance.

The customer maintenance person should refer to the Service and Maintenance Procedures Manual (P-910000-019) for installation of parts which may require special attention or adjustments during installation.

How to Use the Illustrated Parts List

Determine the function and application of the part required. From the illustration, obtain the item number assigned to the desired part. Refer to the accompanying tabular list (usually on the facing page) for the AMSCO order number and description of the part.

IMPORTANT: To assure the correct part is purchased, verify the manufacturer and manufacturer catalog number listed in this document. Incorrect parts may not fit properly and/or may effect machine performance

LIST OF ILLUSTRATIONS

Figure #	Title	Page #
1	Model 6000 Tunnel Washer, Complete Assembly	2
2	Piping Schematic	4
3	Pump and Motor Assembly	8
4	Door Assembly	22
5	Prewash Cabinet – Upper	24
6	Prewash Spray Headers	26
7	Prewash Cabinet – Lower	28
8	Wash/Acid Cabinet – Upper	30
9	Wash/Acid Spray Headers	32
10	Wash/Acid Cabinet – Lower	34
11	Rinse Cabinet – Upper	36
12	Rinse/Final Rinse Spray Headers	38
13	Rinse Cabinet – Lower	40
14	Dry Cabinet – Upper	42
15	Plenum Airflow	44
16	Dry Cabinet – Lower	46
17	Unload End	48
18	Conveyor Adjustment	50
19	Conveyor Belt	52
20	Unload End Conveyor Drive Assembly	54
21	Electro-Mechanical Control	56
22	3000 Control Column Assembly – Electrical Box	58
23	3000 Control Column Assembly – Control Box	60
24	Control PC Board, Power Supply and Connector Board	62
25	Printer/Display Panel Assembly (Part 1 of 2)	64
26	Printer/Display Panel Assembly (Part 2 of 2)	66
27A	3000 Remote Control Inner Panel – Front View	68
27B	3000 Remote Control Inner Panel – Rear View	70
28	3000 Remote Control – Rear View	72

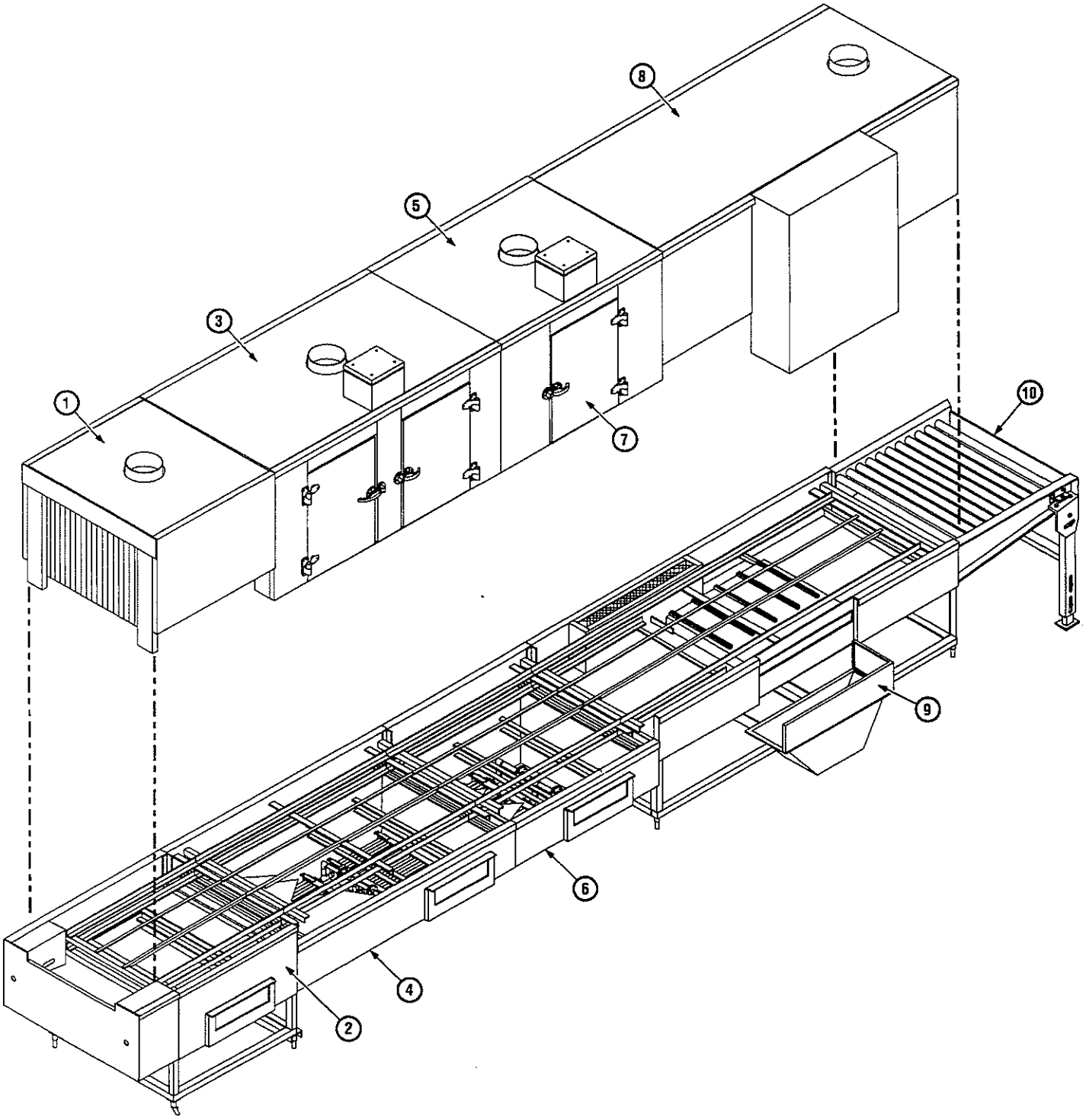

Figure 1. Model 6000 Tunnel Washer - Complete Assembly

Model 6000 Tunnel Washer, Complete Assembly

Call AMSCO Customer Service to Order Parts: 1-800-333-8848

ITEM NUMBER	PART NUMBER	DESCRIPTION	MANUFACTURER AND NUMBER	UNITS PER ASSEMBLY			
1		PREWASH CABINET – UPPER (See Figure 5)					
2		PREWASH CABINET – LOWER (See Figure 7)					
3		WASH/ACID CABINET – UPPER (See Figure 8)					
4		WASH/ACID CABINET – LOWER (See Figure 10)					
5		RINSE CABINET – UPPER (See Figure 11)					
6		RINSE CABINET – LOWER (See Figure 13)					
7		DOOR ASSEMBLY (See Figure 4)					
8		DRY CABINET – UPPER (See Figure 14)					
9		DRY CABINET – LOWER (See Figure 16)					
10		UNLOAD END (See Figure 17)					

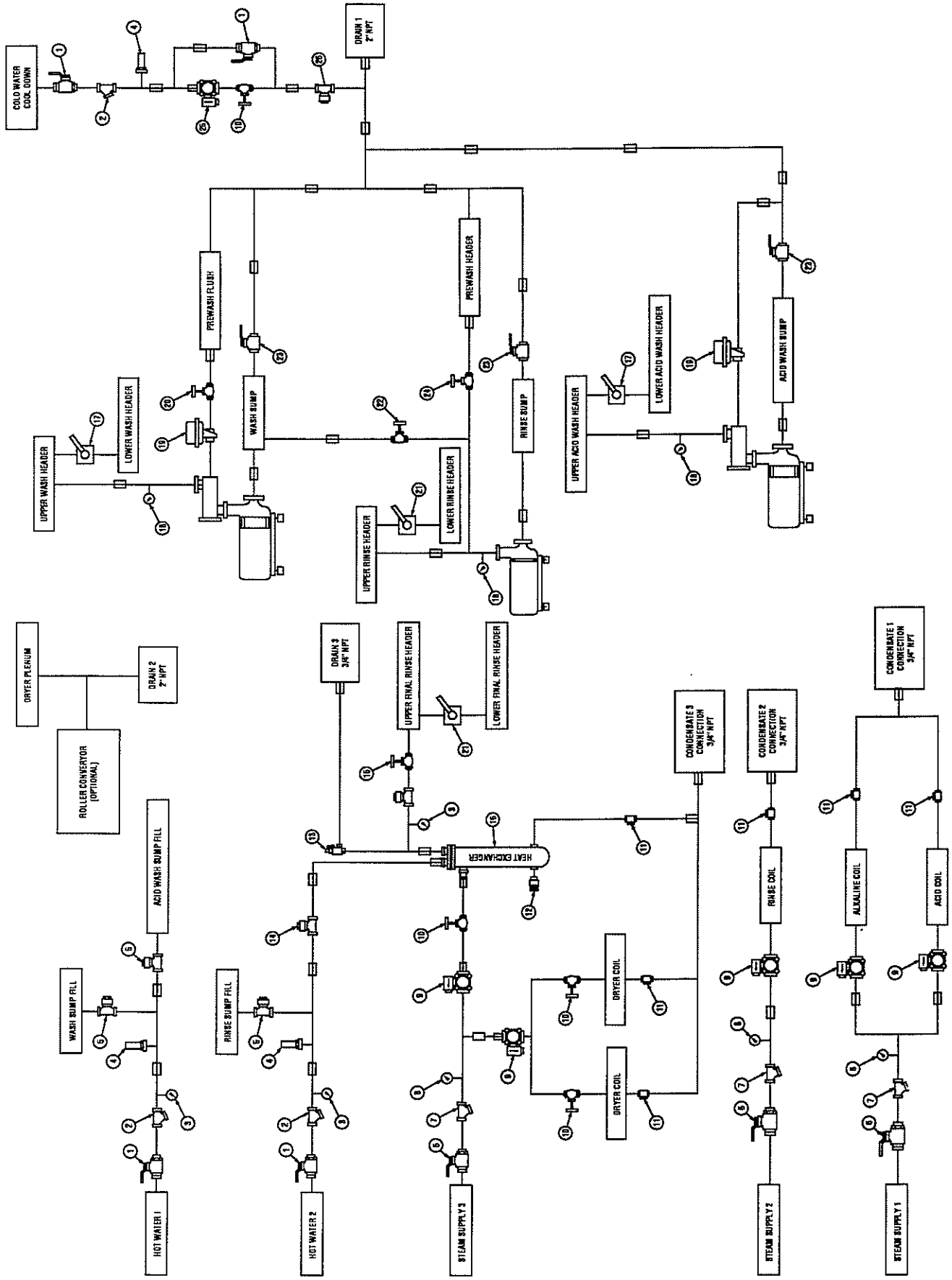

Figure 2. Piping Schematic

Piping Schematic

Call AMSCO Customer Service to Order Parts: 1-800-333-8848

ITEM NUMBER	PART NUMBER	DESCRIPTION	MANUFACTURER AND NUMBER	UNITS PER ASSEMBLY			
		UNITS WITH 24" CONVEYOR BELTS		X			
		UNITS WITH 36" CONVEYOR BELTS			X		
1	764324-514	BALL VALVE, 1" NPT, Brass	Watts 6010-1	4	4		
2	764324-494	STRAINER, 1" NPT, Bronze	Spirax Sarco STR-1BZ	3	3		
3	910006-297	THERMOMETER, 0-250°F	Trend 0-250°F #33040	3	3		
4	910006-017	WATER HAMMER ARRESTOR	Watts #15 Series 1/2" NPT	3	3		
5	910006-024	SOLENOID VALVE, 3/4" NPT, Brass	Asco #8210G9	2	2		
	910006-023	■ KIT, Rebuild	Asco #K302-277				
6	910006-165	BALL VALVE, 1-1/2" NPT, Brass	Jamesbury #351 1-1/2"	3	3		
7	764324-495	STRAINER, 1-1/2" NPT, Cast Iron	Spirax Sarco IT-1-1/2" NPT	3	3		
	910009-008	SCREEN, Replacement					
8	910006-162	PRESSURE GAUGE, 0-100 PSI	Ashcroft #AUB25313, 2-1/2" Dial	3	3		
9	117950-189	SOLENOID VALVE, 1" NPT ,Steam	Asco #8222B4, 1" NPT	5	5		
	764321-242	■ COIL, Valve Repair	216-758-ID				
	764321-495	■ KIT, Rebuild	Asco #K304-035				
10	910006-102	GLOBE VALVE, 1" NPT	Grane Globe #150–14-1/2P–1" NPT	4	4		
	910006-110	■ KIT, Rebuild	AMSCO				
	910006-108	■ SEAT RING, Replacement	AMSCO				
	910006-109	■ DISC, Replacement	AMSCO				
11	764315-066	STEAM TRAP, 3/4" NPT	Spirax Sarco #TD #52 3/4" NPT	6	6		
12	910006-012	VACUUM BREAKER, 1/2" NPT	Spirax Sarco #VB14 Brass	1	1		
13	910006-020	VALVE, Pressure Relief, 125 PSI	Watts #174A, Model M3	1	1		
14	910008-908	CHECK VALVE	Watts Series CV 3/4" NPT	1	1		
15	910006-319	GLOBE VALVE, 3/4" NPT	Crane Globe #150–14-1/2P–3/4" NPT	1	1		
	910006-322	■ KIT, Rebuild	AMSCO				
	910006-320	■ SEAT RING, Replacement	AMSCO				
	910006-321	■ DISC, Replacement	AMSCO				
16	764319-004	SOLENOID VALVE, 3/4" NPT Brass	8222G49	1	1		
	764321-242	■ COIL, Valve Repair	216-758-ID				
		■ KIT, Rebuild	Asco #K304-032				
		NOTE: List continued on page 7.					

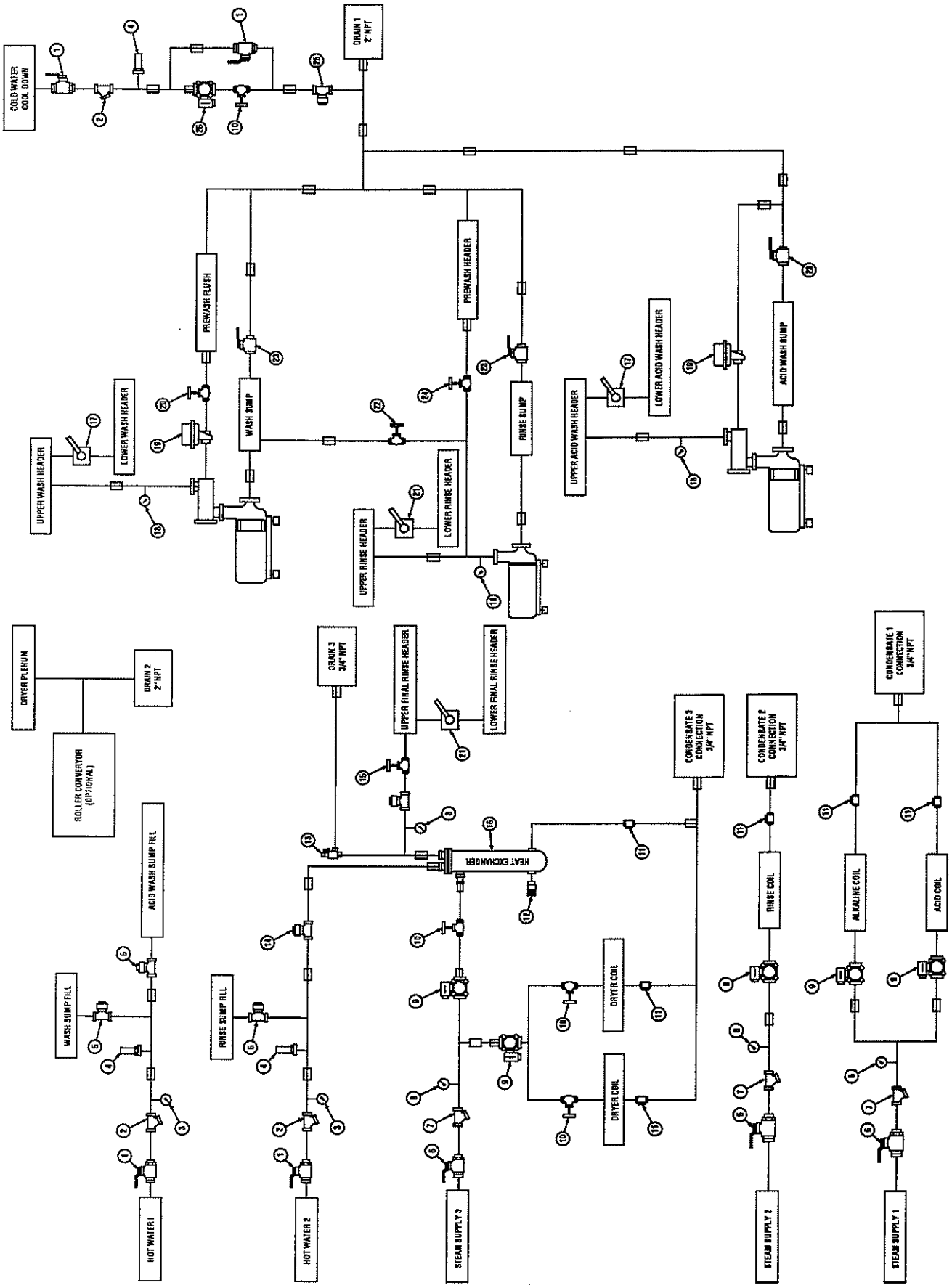

Figure 2. Piping Schematic (repeated)

Piping Schematic (continued)

Call AMSCO Customer Service to Order Parts: 1-800-333-8848

ITEM NUMBER	PART NUMBER	DESCRIPTION	MANUFACTURER AND NUMBER	UNITS PER ASSEMBLY			
		UNITS WITH 24" CONVEYOR BELTS		X			
		UNITS WITH 36" CONVEYOR BELTS			X		
16	910008-038	HEAT EXCHANGER	Basco Type 500 STD #05014-L-4				
17	910006-168	BALL VALVE, 2" NPT, S/S	Jamesbury 2-9NB-3636TT	2	2		
	910006-169	■ KIT, Rebuild	Jamesbury RKG19TT				
	910006-185	■ BALL, Replacement	Jamesbury 001-0550-36				
	910006-186	■ STEM, Replacement	Jamesbury 003-1252-36				
18	764324-481	PRESSURE GAUGE, 0-60 PSI	#7214	3	3		
19	910006-004	BALL VALVE/ACTUATOR, 1" NPT	Jamesbury 21-3600TT/EL-20	2	2		
	764324-449	■ KIT, Rebuild	Jamesbury RKC-23TT				
	910006-309	■ BALL, Replacement	Jamesbury 001-054736				
20	910006-316	GLOBE VALVE, 1" NPT, 150 PSI	Crane Globe 1" NPT #310	1	1		
21	910006-166	BALL VALVE, 1-1/2" NPT, S/S	Jamesbury 9NBFGASATITS	1	1		
	910006-167	■ KIT, Rebuild	Jamesbury RKG 17TT				
	910006-183	■ BALL, Replacement	Jamesbury 001-0549-36				
	910006-184	■ STEM, Replacement	Jamesbury 003-1252-36				
22	910006-317	GLOBE VALVE, 1/2" NPT, S/S	Crane Globe 1/2" NPT #310	1	1		
23	764324-513	BALL VALVE, 1-1/2" NPT, Brass	Watts 1-1/2"–B6010	3	3		
24	910006-316	GLOBE VALVE, 1" NPT, S/S	Crane Globe #310	1	1		
25	758315-091	SOLENOID VALVE, 1" NPT, Brass	Asco #8210DA	1	1		
	764324-355	■ KIT, Rebuild	Asco K302-280				
	762101-003	■ COIL, Valve Repair	99-216-ID				
26	910006-087	CHECK VALVE, 1" NPT, S/S	Sharp #20276	1	1		

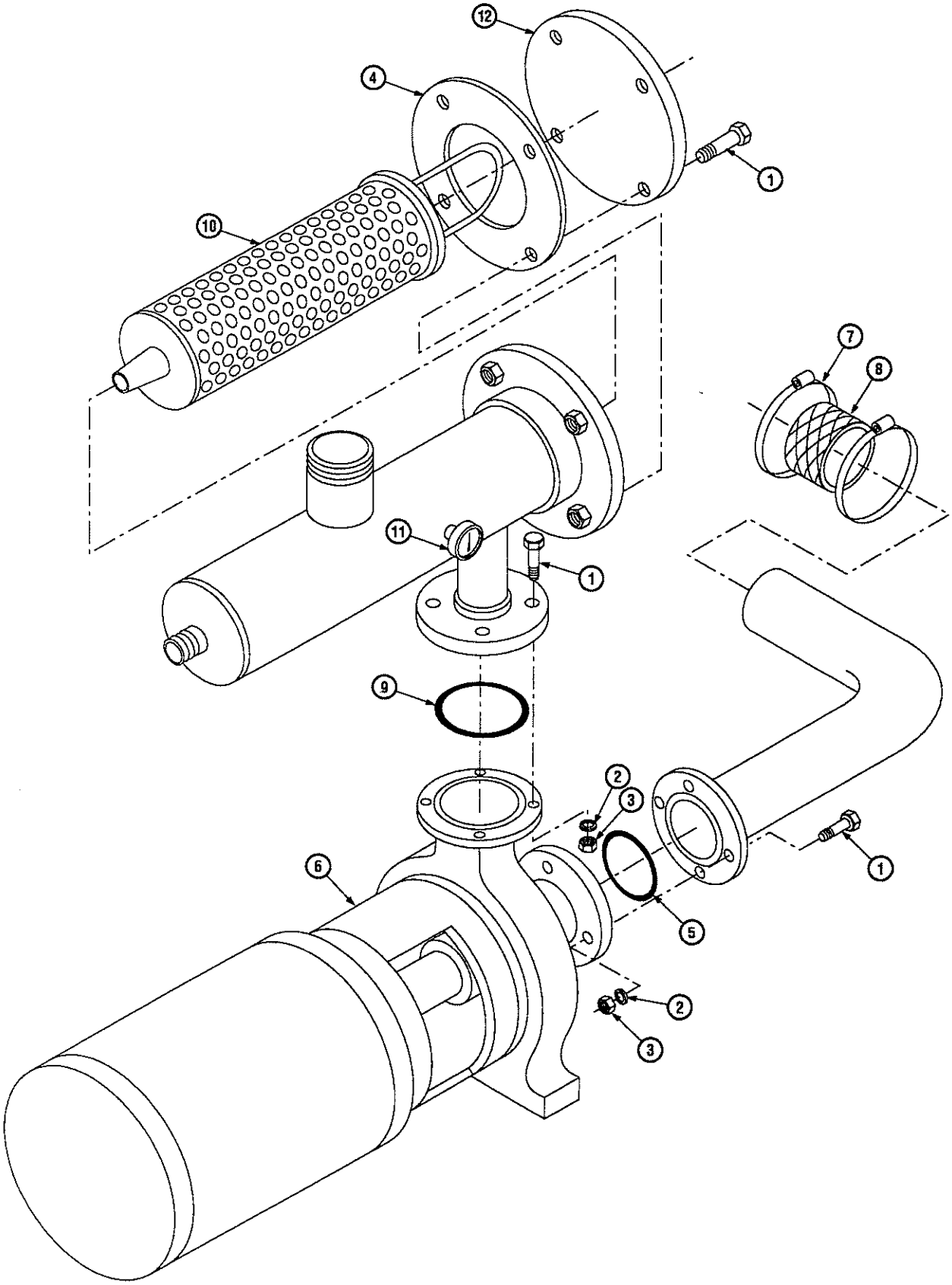

Figure 3. Pump and Motor Assembly

Pump and Motor Assembly

Call AMSCO Customer Service to Order Parts: 1-800-333-8848

ITEM NUMBER	PART NUMBER	DESCRIPTION	MANUFACTURER AND NUMBER	UNITS PER ASSEMBLY							
		WASH PUMP AND MOTOR, 10 HP, S/S		X							
		WASH PUMP AND MOTOR, 7-1/2 HP, S/S			X						
		WASH PUMP AND MOTOR, 5 HP, S/S				X					
		WASH PUMP AND MOTOR, 3 HP, S/S					X				
		WASH PUMP AND MOTOR, 10 HP, CAST IRON						X			
		WASH PUMP AND MOTOR, 7-1/2 HP, CAST IRON							X		
		RINSE PUMP AND MOTOR, 5 HP, CAST IRON								X	
		RINSE PUMP AND MOTOR, 3 HP, CAST IRON									X
1	387340-733	BOLT, Flange, 5/8 – 11 x 3-1/2" Lg, 304 S/S		8	8	8	8	8	8	8	8
2	19692-061	LOCK WASHER, 5/8", 304 S/S		8	8	8	8	8	8	8	8
3	32467-061	NUT, Flange, 5/8 – 11, 304 S/S		8	8	8	8	8	8	8	8
4	764324-398	GASKET, Self Cleaning Screen Flange – 4" ID	Taskline TL 400150	1	1	–	–	1	1	–	–
5	764324-400	GASKET, Pump Suction Pipe Flange – 3" ID	Taskline TL 300150	1	1	1	–	1	1	1	1
	764324-399	GASKET, Pump Suction Pipe Flange – 2" ID	Taskline TL200150	1	1	1	1	1	1	1	1
6	910042-012	S/S PUMP AND MOTOR ASSEMBLY	Worthington D1022, 3 x 2 x 6, 5.6" S/S IMP, 10 HP	1	–	–	–	–	–	–	–
	910006-286	■ KIT, Pump End	Worthington CGD, RR x 9, 5.9" KIT	1	–	–	–	–	–	–	–
	910006-282	■ MOTOR, 10 HP	US Motors	1	–	–	–	–	–	–	–
	764324-534	■ ROTARY SEAT, Seal	Worthington P02891	1	–	–	–	–	–	–	–
	764324-536	■ STATIONARY SEAT, Seal	Worthington P02899	1	–	–	–	–	–	–	–
	910042-020	■ SNAP RING, S/S	Worthington 50503	1	–	–	–	–	–	–	–
	910042-019	■ KEY IMPELLER	Worthington 16762	1	–	–	–	–	–	–	–
	910042-014	■ IMPELLER, S/S	Worthington 959377 x 5.6" S/S Imp.	1	–	–	–	–	–	–	–
	910042-016	■ SHAFT SLEEVE	Worthington 960485-02	1	–	–	–	–	–	–	–
	910042-018	■ RING, Adaptor and Cover	Worthington 960187	1	1	–	–	–	–	–	–

NOTE: List continued on page 11.

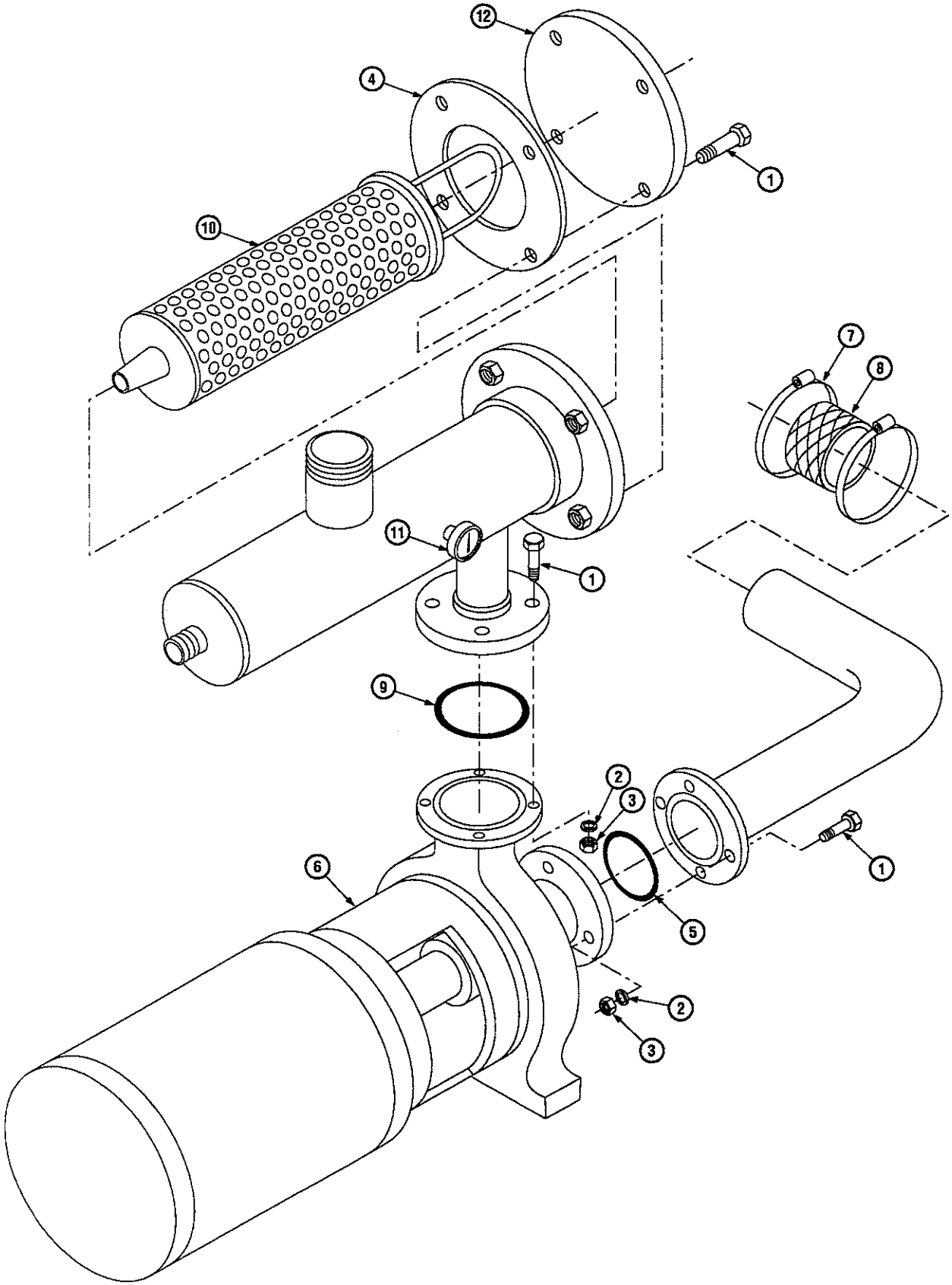

Figure 3. Pump and Motor Assembly (repeated)

Pump and Motor Assembly (continued)

Call AMSCO Customer Service to Order Parts: 1-800-333-8848

ITEM NUMBER	PART NUMBER	DESCRIPTION	MANUFACTURER AND NUMBER	UNITS PER ASSEMBLY							
		WASH PUMP AND MOTOR, 10 HP, S/S		X							
		WASH PUMP AND MOTOR, 7-1/2 HP, S/S			X						
		WASH PUMP AND MOTOR, 5 HP, S/S				X					
		WASH PUMP AND MOTOR, 3 HP, S/S					X				
		WASH PUMP AND MOTOR, 10 HP, CAST IRON						X			
		WASH PUMP AND MOTOR, 7-1/2 HP, CAST IRON							X		
		RINSE PUMP AND MOTOR, 5 HP, CAST IRON								X	
		RINSE PUMP AND MOTOR, 3 HP, CAST IRON									X
	910042-021	GASKET KIT		1	–	–	–	–	–	–	–
		■ CASING GASKET	Worthington 390007-10								
		■ LOCK WASHER, Impeller	Worthington 390035								
		■ GASKET, Impeller Screw	Worthington P02737-00								
		■ GASKET, Impeller Lock Washer	Worthington 390038-10								
		■ GASKET, Outer Sleeve	Worthington 389033-00								
		■ O-RING, Shaft Sleeve	Worthington P02066-00								
	910042-093	S/S PUMP AND MOTOR ASSEMBLY	Worthington D1022, 3 x 2 x 5, 4.8" S/S Imp, 7.5 HP, 3/60/230-460V	–	1	–	–	–	–	–	–
	910042-094	S/S PUMP AND MOTOR ASSEMBLY	Worthington D1022, 3 x 2 x 5, 4.8" S/S Imp, 7.5 HP, 3/60/208V	–	1	–	–	–	–	–	–
	910042-096	■ KIT, Pump End	Worthington CGA, RR x 8, 4.8" KIT	–	1	–	–	–	–	–	–
	910042-098	■ MOTOR, 7-1/2 HP (3/60/230-460V)	Worthington 809816	–	1	–	–	–	–	–	–
	910042-099	■ MOTOR, 7-1/2 HP (3/60/208V)	Worthington 809815	–	1	–	–	–	–	–	–
	764324-533	■ ROTARY SEAT, Seal	Worthington P02890-00	–	1	1	–	–	–	–	–
	910042-102	■ STATIONARY SEAT, Seal	Worthington P02898-00	–	1	1	–	–	–	–	–
	910042-006	■ SNAP RING, S/S	Worthington 50502	–	1	1	–	–	–	–	–

NOTE: List continued on page 13.

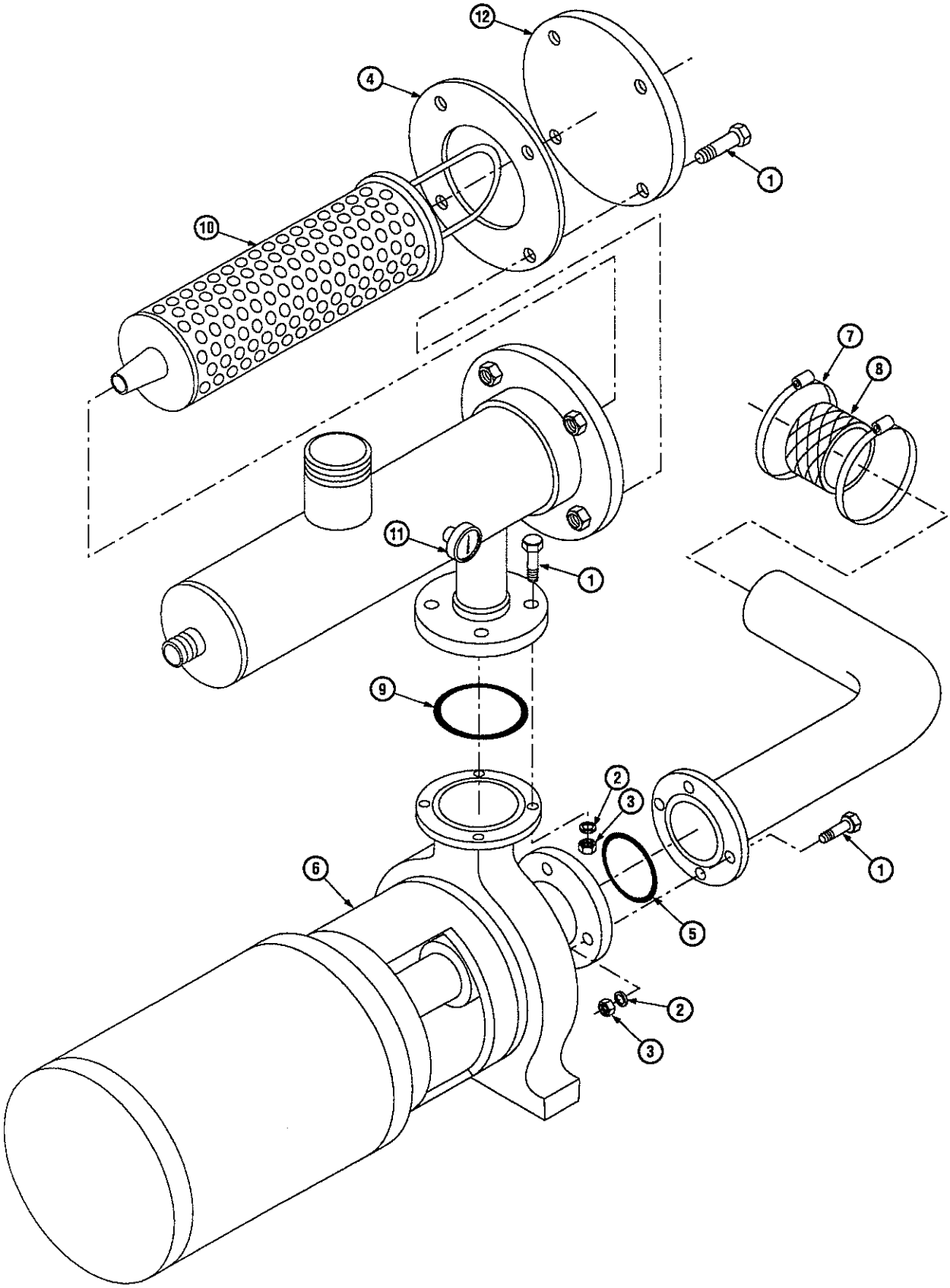

Figure 3. Pump and Motor Assembly (repeated)

Pump and Motor Assembly (continued)

Call AMSCO Customer Service to Order Parts: 1-800-333-8848

ITEM NUMBER	PART NUMBER	DESCRIPTION	MANUFACTURER AND NUMBER	UNITS PER ASSEMBLY							
		WASH PUMP AND MOTOR, 10 HP, S/S		X							
		WASH PUMP AND MOTOR, 7-1/2 HP, S/S			X						
		WASH PUMP AND MOTOR, 5 HP, S/S				X					
		WASH PUMP AND MOTOR, 3 HP, S/S					X				
		WASH PUMP AND MOTOR, 10 HP, CAST IRON						X			
		WASH PUMP AND MOTOR, 7-1/2 HP, CAST IRON							X		
		RINSE PUMP AND MOTOR, 5 HP, CAST IRON								X	
		RINSE PUMP AND MOTOR, 3 HP, CAST IRON									X
	910042-101	■ IMPELLER, S/S	Worthington 959394, 00 x 4.8" S/S Imp.	–	1	–	–	–	–	–	–
	910042-103	■ SHAFT SLEEVE	Worthington 460488-01	–	1	1	–	–	–	–	–
	910042-104	GASKET KIT		–	1	1	–	–	–	–	–
		■ CASING GASKET	Worthington 390006-10								
		■ LOCK WASHER, Impeller	Worthington 390033-00								
		■ GASKET, Impeller Screw	Worthington P02736-00								
		■ GASKET, Impeller Lock Washer	Worthington 390036-01								
		■ GASKET, Outer Sleeve	Worthington 389013-00								
		■ O-RING, Shaft Sleeve	Worthington P02065-00								
	910042-092	S/S PUMP AND MOTOR ASSEMBLY	Worthington D1022, 3 x 2 x 5, 4.6" S/S Imp, 5HP	–	–	1	–	–	–	–	–
	910042-095	■ KIT, Pump End	Worthington CGA, RR x 8, 4.6" KIT	–	–	1	–	–	–	–	–
	910042-097	■ MOTOR, 5 HP	Worthington 809812	–	–	1	–	–	–	–	–
	910042-100	■ IMPELLER, S/S	Worthington 959394, 00 x 4.6" S/S Imp.	–	–	1	–	–	–	–	–

NOTE: List continued on page 15.

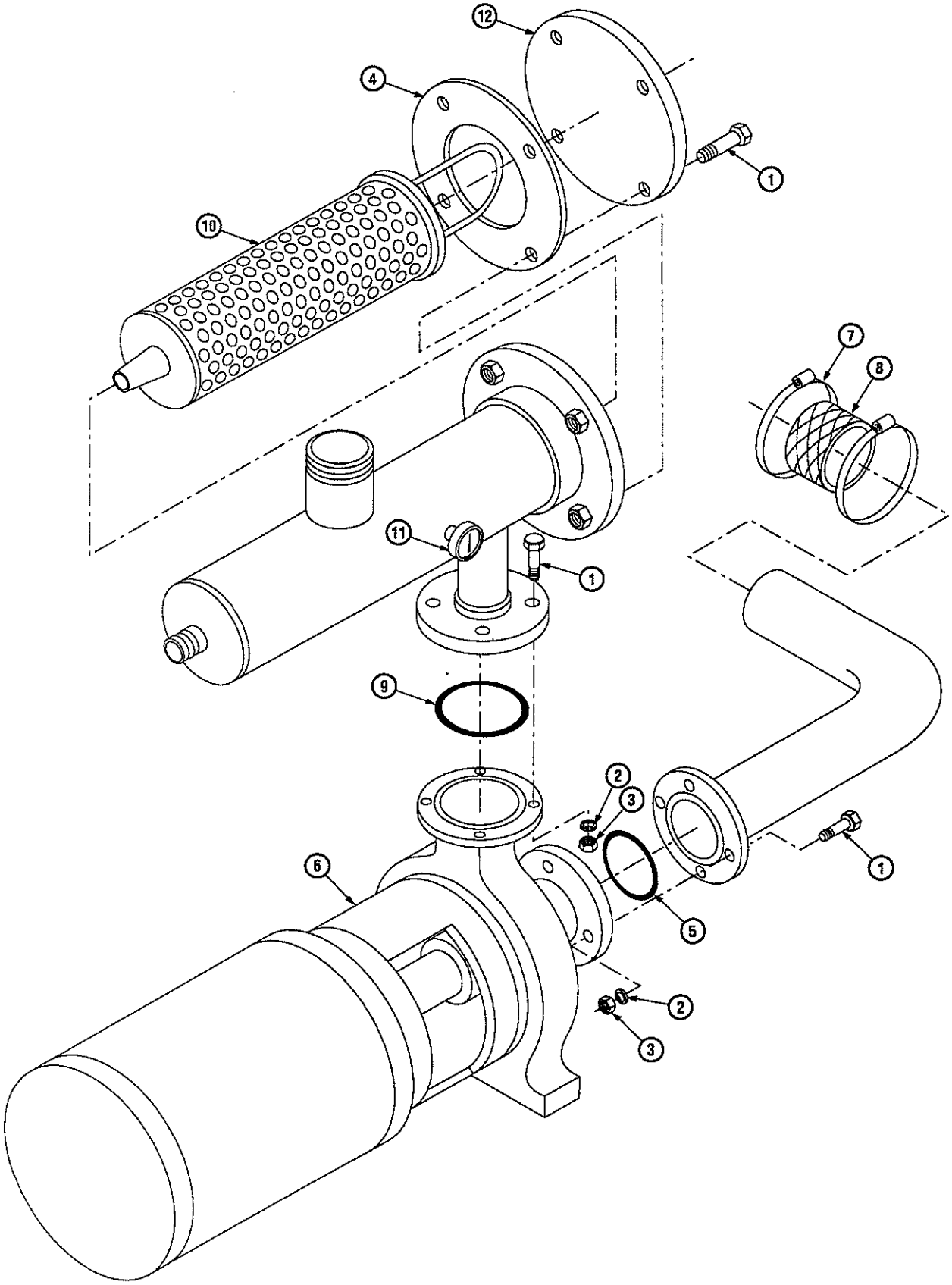

Figure 3. Pump and Motor Assembly (repeated)

Pump and Motor Assembly (continued)

Call AMSCO Customer Service to Order Parts: 1-800-333-8848

ITEM NUMBER	PART NUMBER	DESCRIPTION	MANUFACTURER AND NUMBER	UNITS PER ASSEMBLY							
		WASH PUMP AND MOTOR, 10 HP, S/S		X							
		WASH PUMP AND MOTOR, 7-1/2 HP, S/S			X						
		WASH PUMP AND MOTOR, 5 HP, S/S				X					
		WASH PUMP AND MOTOR, 3 HP, S/S					X				
		WASH PUMP AND MOTOR, 10 HP, CAST IRON						X			
		WASH PUMP AND MOTOR, 7-1/2 HP, CAST IRON							X		
		RINSE PUMP AND MOTOR, 5 HP, CAST IRON								X	
		RINSE PUMP AND MOTOR, 3 HP, CAST IRON									X
	910042-080	S/S PUMP AND MOTOR ASSEMBLY	Worthington D520, 2 x 1.5 x 4, 4.25" S/S Imp, 3 HP	–	–	–	1	–	–	–	–
	910042-083	■ KIT, Pump End	Worthington RCAQ, 4.2" KIT	–	–	–	1	–	–	–	–
	910042-085	■ MOTOR, 3 HP	Worthington P02135	–	–	–	1	–	–	–	–
	910042-090	■ STATIONARY SEAT, Seal	Worthington P02099	–	–	–	1	–	–	–	–
	910042-088	■ IMPELLER, S/S	Worthington 959509 x 4.25", S/S	–	–	–	1	–	–	–	–
	910042-091	■ GASKET, Casing	Worthington 390055-04	–	–	–	1	–	–	–	–
	910042-065	CAST IRON PUMP AND MOTOR ASSEMBLY	Worthington D824, 3 x 2 x 6, 5.6" CI IMP, 10 HP	–	–	–	–	1	–	–	–
	910042-069	■ KIT, Pump End	Worthington RAZY, RRW6, 5.6" KIT	–	–	–	–	1	–	–	–
	910006-283	■ MOTOR, 10 HP	Worthington 809847	–	–	–	–	1	–	–	–
	910042-008	■ ROTARY SEAL	Worthington P02886	–	–	–	–	1	1	1	–
	764324-535	■ ROTARY SEAT, Seal	Worthington P02894	–	–	–	–	1	1	1	–
	910042-006	■ RING, Retaining	Worthington 50502	–	–	–	–	1	1	1	–

NOTE: List continued on page 17.

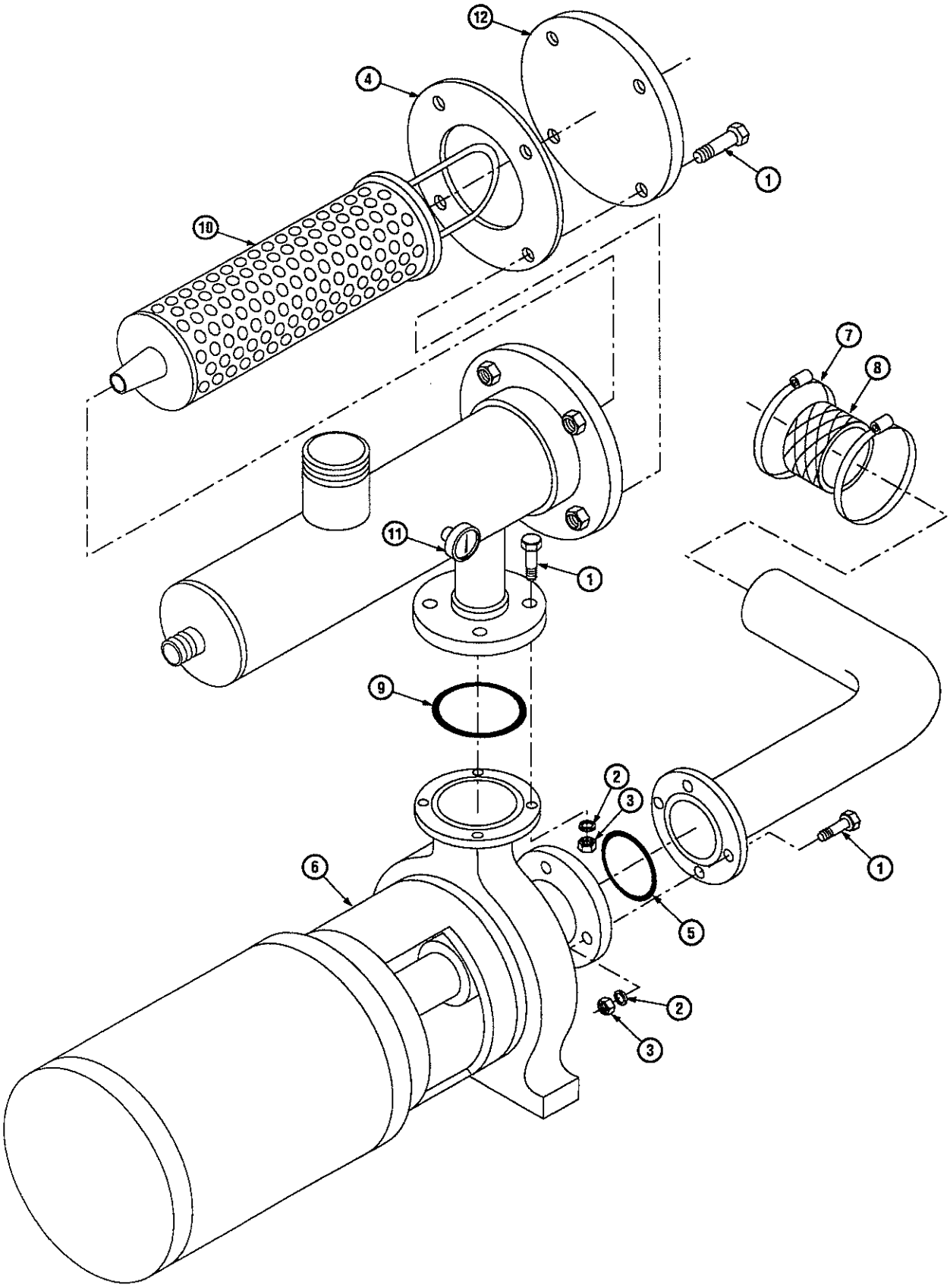

Figure 3. Pump and Motor Assembly (repeated)

Pump and Motor Assembly (continued)

Call AMSCO Customer Service to Order Parts: 1-800-333-8848

ITEM NUMBER	PART NUMBER	DESCRIPTION	MANUFACTURER AND NUMBER	UNITS PER ASSEMBLY							
		WASH PUMP AND MOTOR, 10 HP, S/S		X							
		WASH PUMP AND MOTOR, 7-1/2 HP, S/S			X						
		WASH PUMP AND MOTOR, 5 HP, S/S				X					
		WASH PUMP AND MOTOR, 3 HP, S/S					X				
		WASH PUMP AND MOTOR, 10 HP, CAST IRON						X			
		WASH PUMP AND MOTOR, 7-1/2 HP, CAST IRON							X		
		RINSE PUMP AND MOTOR, 5 HP, CAST IRON								X	
		RINSE PUMP AND MOTOR, 3 HP, CAST IRON									X
	910042-075	■ IMPELLER, CI	Worthington 953551-75 x 5.6" CI	–	–	–	–	1	–	–	–
	910042-005	■ SLEEVE, Shaft	Worthington 959436-06	–	–	–	–	1	1	1	–
	910042-004	■ RING, Adapter and Cover	Worthington 959408-00	–	–	–	–	1	–	–	–
	910042-011	GASKET KIT	Worthington 0GASKT-12	–	–	–	–	1	1	1	–
		■ SCREW, Impeller	Worthington 809649-00								
		■ WASHER, Impeller	Worthington 390416-00								
		■ GASKET, Screw Impeller	Worthington P02736-00								
		■ GASKET, Impeller Washer	Worthington 390036-10								
		■ GASKET, Sleeve Shaft	Worthington 389013-10								
		■ GASKET, O-Ring	Worthington P02065-00								
		■ GASKET, Casing	Worthington 390006-10								
		■ GASKET, Casing	Worthington 390007-10								
	910042-066	CAST IRON PUMP AND MOTOR ASSEMBLY	Worthington D824, 3 x 2 x 5 4.8" CI Imp, 7.5 HP, 3/60/230-460V	–	–	–	–	–	1	–	–
	910042-067	CAST IRON PUMP AND MOTOR ASSEMBLY	Worthington D824, 3 x 2 x 5 4.8" CI Imp, 7.5 HP, 3/60/208V	–	–	–	–	–	1	–	–

NOTE: List continued on page 19.

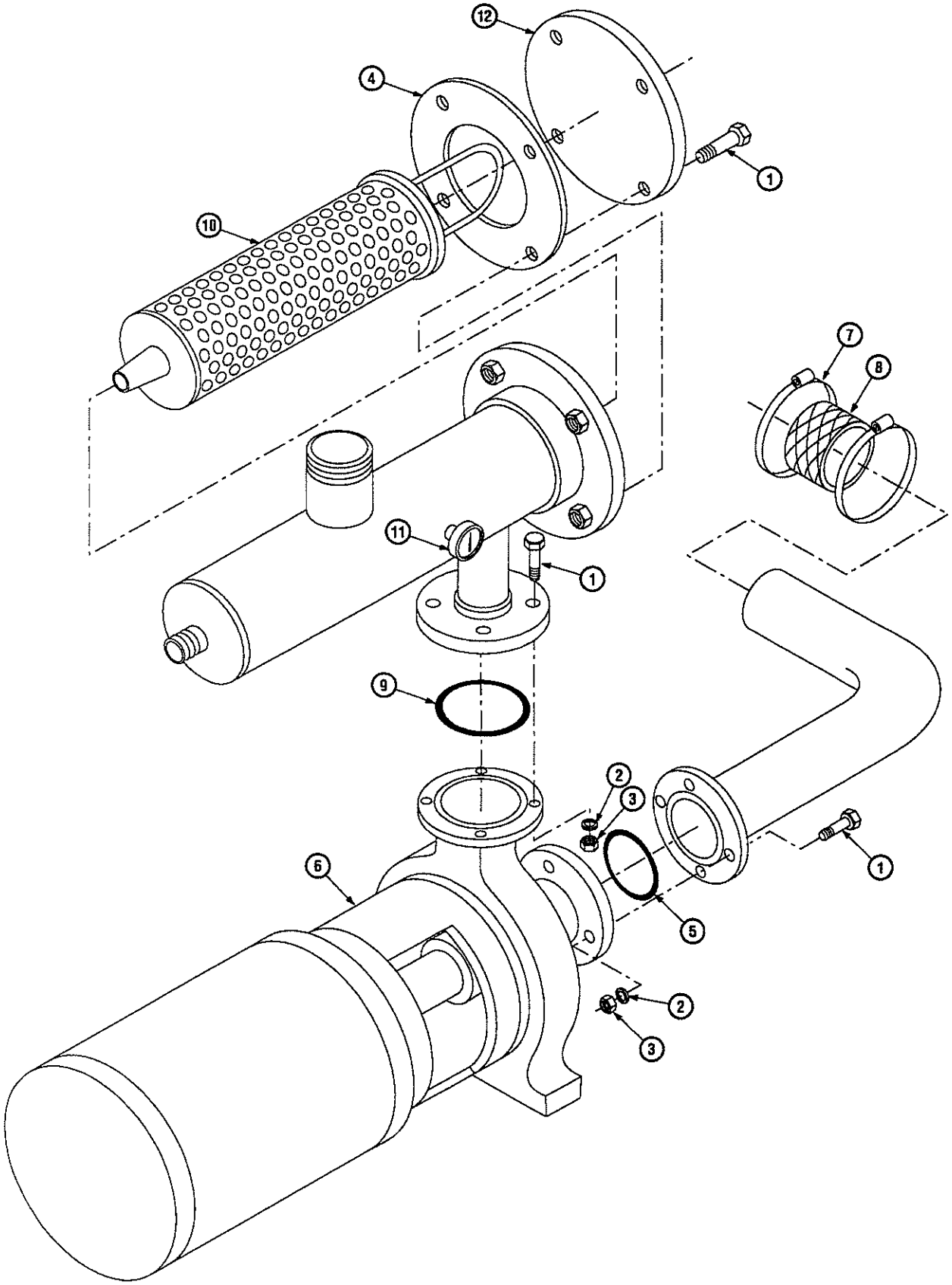

Figure 3. Pump and Motor Assembly (repeated)

Pump and Motor Assembly (continued)

Call AMSCO Customer Service to Order Parts: 1-800-333-8848

ITEM NUMBER	PART NUMBER	DESCRIPTION	MANUFACTURER AND NUMBER	UNITS PER ASSEMBLY							
		WASH PUMP AND MOTOR, 10 HP, S/S		X							
		WASH PUMP AND MOTOR, 7-1/2 HP, S/S			X						
		WASH PUMP AND MOTOR, 5 HP, S/S				X					
		WASH PUMP AND MOTOR, 3 HP, S/S					X				
		WASH PUMP AND MOTOR, 10 HP, CAST IRON						X			
		WASH PUMP AND MOTOR, 7-1/2 HP, CAST IRON							X		
		RINSE PUMP AND MOTOR, 5 HP, CAST IRON								X	
		RINSE PUMP AND MOTOR, 3 HP, CAST IRON									X
	910042-070	■ KIT, Pump End	Worthington RA2V-RRW6, 4.8" KIT	–	–	–	–	–	1	–	–
	910042-072	■ MOTOR, 7-1/2 (3/60/230-460V)	Worthington 809841	–	–	–	–	–	1	–	–
	910042-073	■ MOTOR, 7-1/2 (3/60/208V)	Worthington 809840	–	–	–	–	–	1	–	–
	910042-076	■ IMPELLER, CI	Worthington 954021, 75 x 4.8" CI	–	–	–	–	–	1	–	–
	910042-010	■ RING, Adapter and Cover	Worthington 959405-00	–	–	–	–	–	1	1	–
	910042-068	CAST IRON PUMP AND MOTOR ASSEMBLY	Worthington D824, 3 x 2 x 5, 4.6" CI Imp, 5 HP	–	–	–	–	–	–	1	–
	910042-071	■ KIT, Pump End	Worthington RA2V-RRW6, 4.6" KIT	–	–	–	–	–	–	1	–
	910042-074	■ MOTOR, 5 HP (3/60/208/230/460V)	Worthington 809837	–	–	–	–	–	–	1	–
	910042-077	■ IMPELLER, CI	Worthington 954021, 75 x 4.6" CI	–	–	–	–	–	–	1	–
	910042-079	CAST IRON PUMP AND MOTOR ASSEMBLY	Worthington D520, 2 x 1.5 x 4, 4.25" CI Imp, 3 HP	–	–	–	–	–	–	–	1
	910042-082	■ KIT, Pump End	Worthington RA5W, 4.2" KIT	–	–	–	–	–	–	–	1
	910042-085	■ MOTOR, 3 HP	Worthington P02135	–	–	–	–	–	–	–	1
	910042-087	■ IMPELLER, CI	Worthington 953990 x 4.25" CI	–	–	–	–	–	–	–	1

NOTE: List continued on page 21.

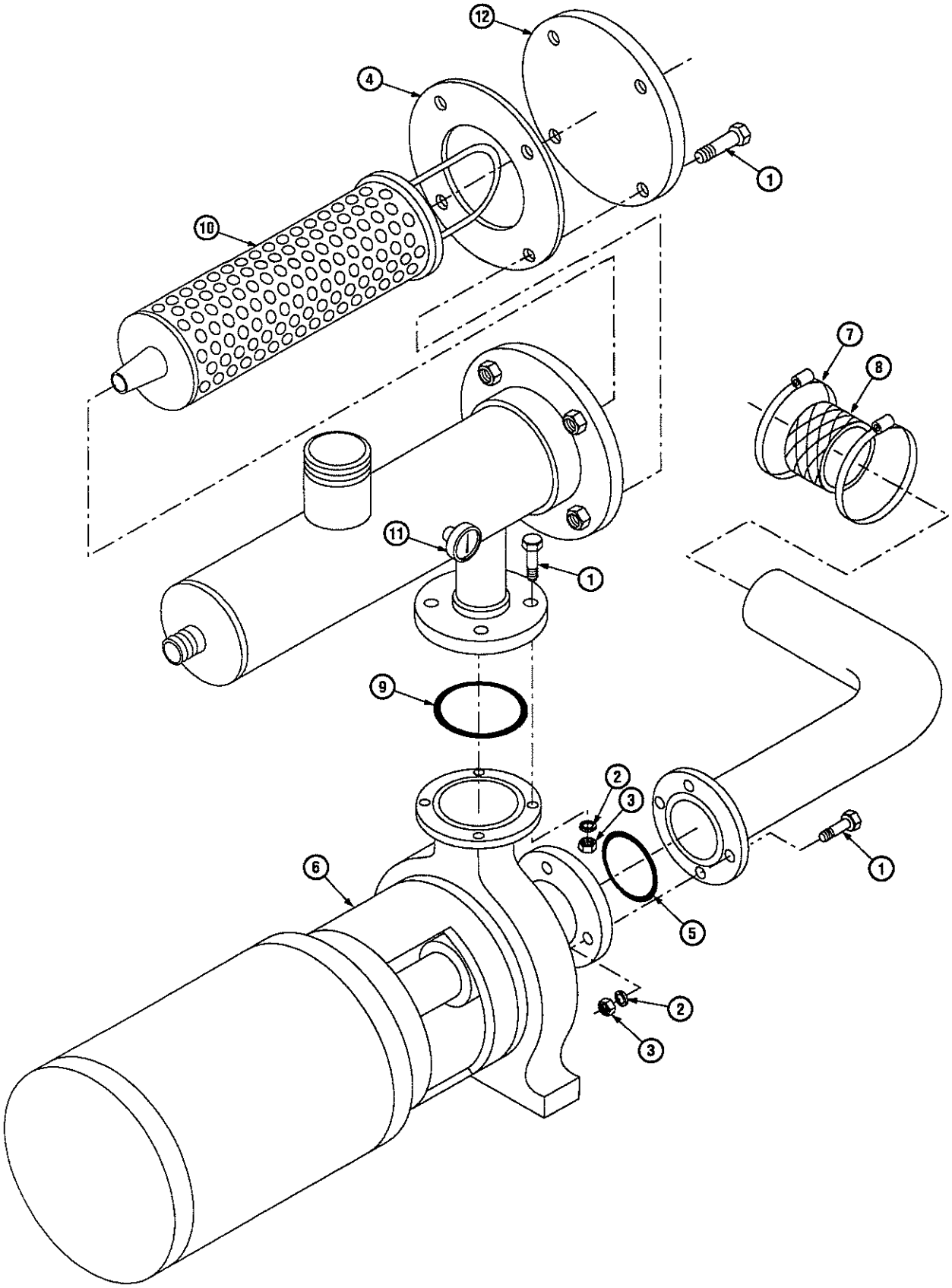

Figure 3. Pump and Motor Assembly (repeated)

Pump and Motor Assembly (continued)

Call AMSCO Customer Service to Order Parts: 1-800-333-8848

ITEM NUMBER	PART NUMBER	DESCRIPTION	MANUFACTURER AND NUMBER	UNITS PER ASSEMBLY							
		WASH PUMP AND MOTOR, 10 HP, S/S		X							
		WASH PUMP AND MOTOR, 7-1/2 HP, S/S			X						
		WASH PUMP AND MOTOR, 5 HP, S/S				X					
		WASH PUMP AND MOTOR, 3 HP, S/S					X				
		WASH PUMP AND MOTOR, 10 HP, CAST IRON						X			
		WASH PUMP AND MOTOR, 7-1/2 HP, CAST IRON							X		
		RINSE PUMP AND MOTOR, 5 HP, CAST IRON								X	
		RINSE PUMP AND MOTOR, 3 HP, CAST IRON									X
	910042-089	■ STATIONARY SEAT, Seal	Worthington P02098	–	–	–	–	–	–	–	1
	910042-091	■ GASKET, Casing	Worthington 390055-04	–	–	–	–	–	–	–	1
7	117950-792	CLAMP, Hose, Pump Suction, 3-3/4" S/S	Dixon HSS-64	2	2	2	–	2	2	2	–
	117950-790	CLAMP, Hose, Pump Suction, 2-1/2"	Dixon HSS-40	–	–	–	2	–	–	–	2
8	R3500-983	HOSE, Pump Suction, 3-1/2" ID	Gates Hose 35 W	1	1	1	–	1	1	1	–
	R3500-982	HOSE, Pump Suction, 2-1/2" ID	Gates Hose 35 W	–	–	–	1	–	–	–	1
9		GASKET, Outlet Flange, 1-1/2"	Taskline TL 150150	–	–	–	1	–	–	–	1
10	910001-537	BASKET, Self-cleaning Screen	A4600-121	1	1	1	1	1	1	1	1
11	764324-481	GAUGE,Pump Pressure (Liquid Filled), 0-60 PSI	7214	1	1	1	1	1	1	1	1
12	910007-318	FLANGE, Blind 150 lbs, 4" Pipe, 304 S/S		1	1	1	1	1	1	1	1

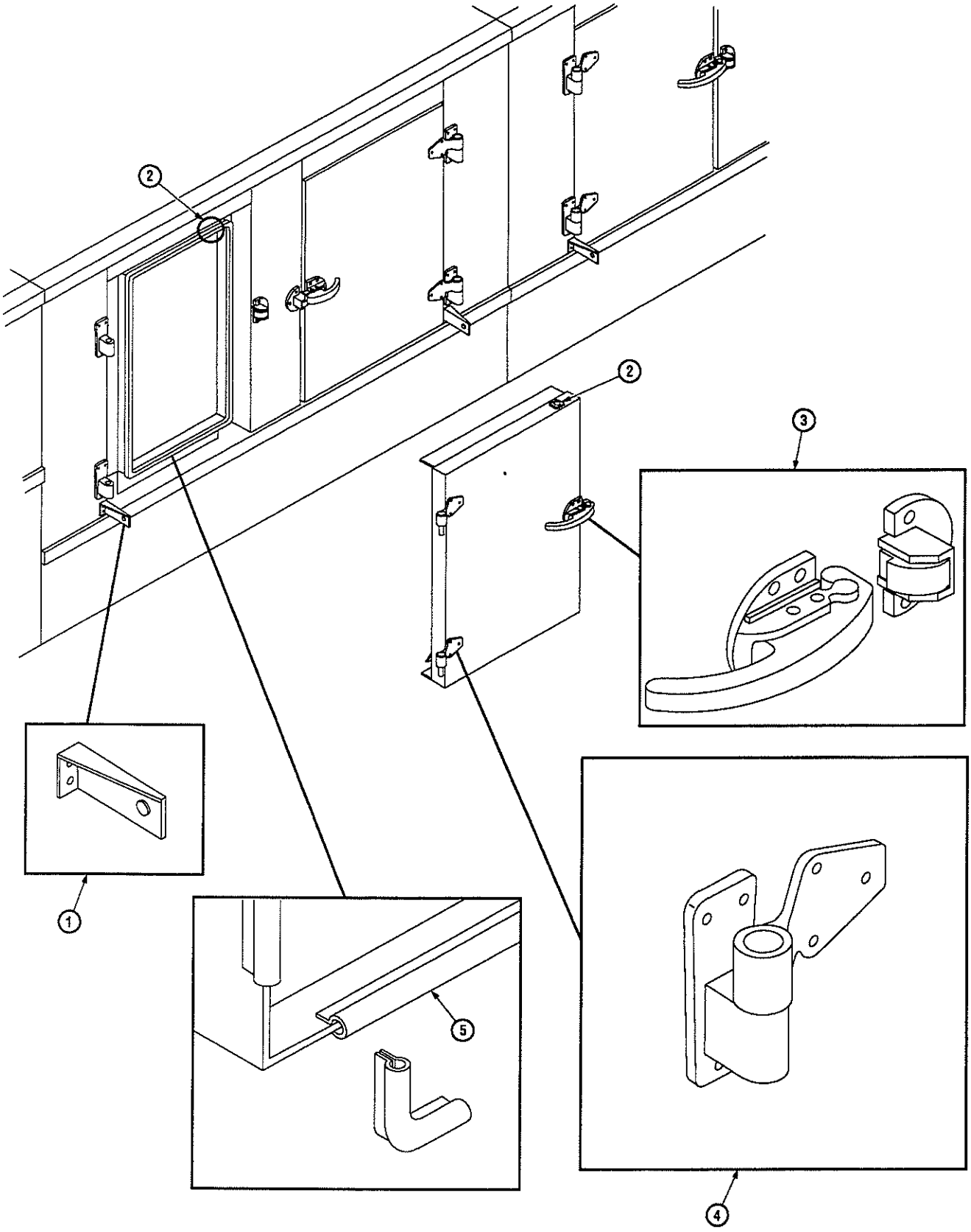

Figure 4. Door Assembly

Door Assembly

Call AMSCO Customer Service to Order Parts: 1-800-333-8848							
ITEM NUMBER	PART NUMBER	DESCRIPTION	MANUFACTURER AND NUMBER	UNITS PER ASSEMBLY			
1		ASSEMBLY, Door Stop	Basil B6007-90	1			
2	764324-489	MAGNET, Door Switch	Sentrol #03-1176	1			
3	910008-770	LATCH, Surface Mount	Kason #930-A	1			
4	910008-221	HINGE	Kason #1246-0000-28	2			
5	764324-393	GASKET, Door	North American Reese #RF-101	1			

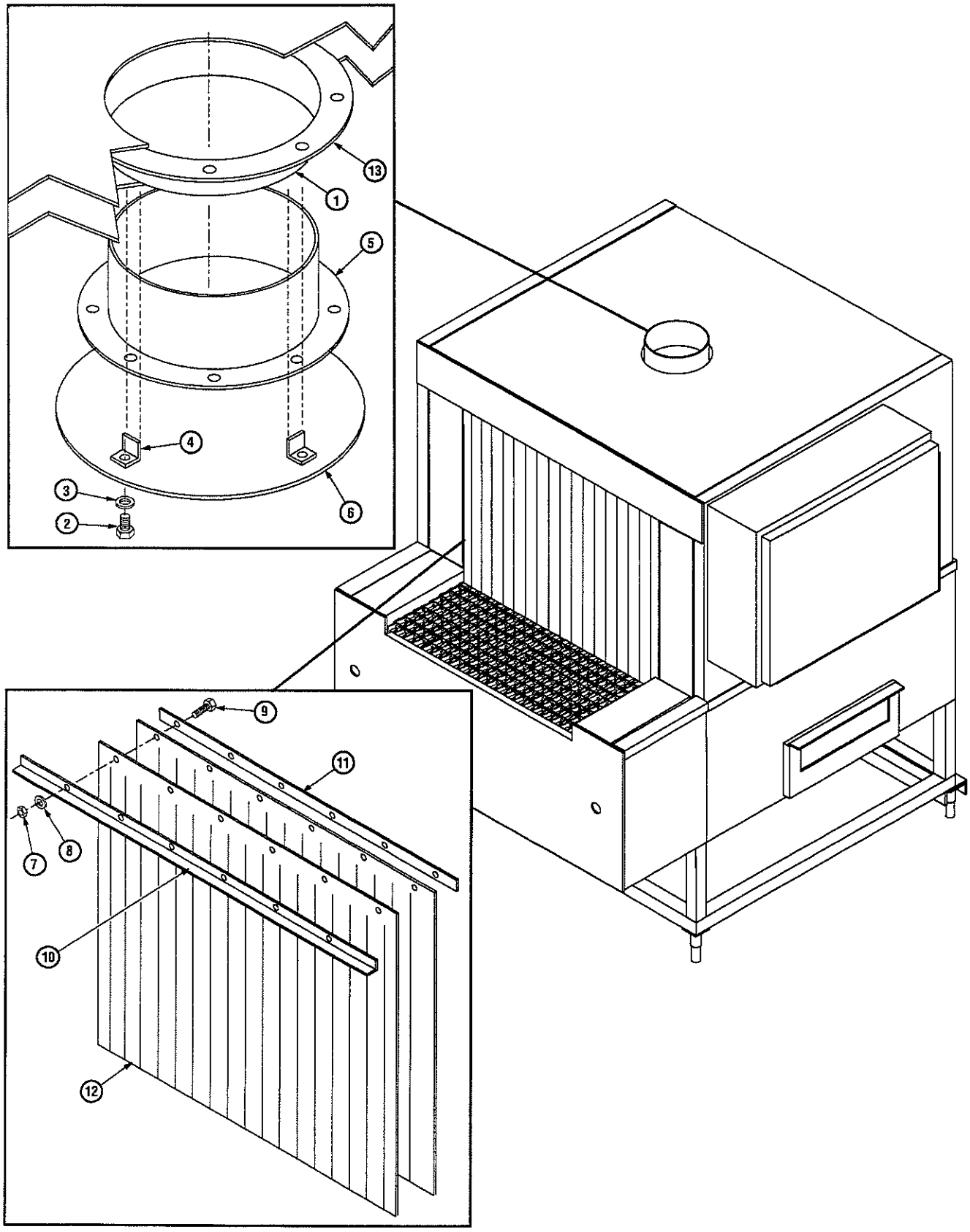

Figure 5. Prewash Cabinet - Upper

Prewash Cabinet - Upper

Call AMSCO Customer Service to Order Parts: 1-800-333-8848

ITEM NUMBER	PART NUMBER	DESCRIPTION	MANUFACTURER AND NUMBER	UNITS PER ASSEMBLY			
		UNITS WITH 24" CONVEYOR BELT		X			
		UNITS WITH 30" CONVEYOR BELT			X		
		UNITS WITH 36" CONVEYOR BELT				X	
1	910001-506	VENT, Exhaust	Basil A6036-300	1	1	1	
2		■ BOLT		1	1	1	
3		■ WASHER		1	1	1	
4		■ CLIP, Stack	Basil A3500-397	1	1	1	
5		■ ASSEMBLY, Exhaust Vent	Basil A6007-113	1	1	1	
6		■ COVER, Vent	Basil B6007-3062	1	1	1	
7	76239-061	NUT, Fin Hex, 1/4" – 20, S/S		1	1	1	
8	129353-292	LOCK WASHER, 1/4", S/S		1	1	1	
9	124266-031	BOLT, Hex Head 1/4" – 20 x 1-1/4" Lg, S/S		1	1	1	
10		SUPPORT, Angle, 1-1/4 x 1-1/4 x 3/16 x 35-1/4, S/S	Basil B6024-115	1	–	–	
		SUPPORT, Angle, 1-1/4 x 1-1/4 x 3/16 x 41-1/4, S/S	Basil B6007-115	–	1	–	
		SUPPORT, Angle, 1-1/4 x 1-1/4 x 3/16 x 47-1/4, S/S	Basil B6036-115	–	–	1	
11		SUPPORT, Flat, 12 Ga. Strip, 1" x 35-1/4", S/S	Basil B6024-115	1	–	–	
		SUPPORT, Flat, 12 Ga. Strip, 1" x 41-1/4", S/S	Basil B6007-115	–	1	–	
		SUPPORT, Flat, 12 Ga. Strip, 1" x 47-1/4", S/S	Basil B6036-115	–	–	1	
12		CURTAIN, Neoprene	Basil B6024-115	1	–	–	
		CURTAIN, Neoprene	Basil B6007-115	–	1	–	
		CURTAIN, Neoprene	Basil B6036-115	–	–	1	
13		RING, Exhaust	Basil A6036-301	1	1	1	

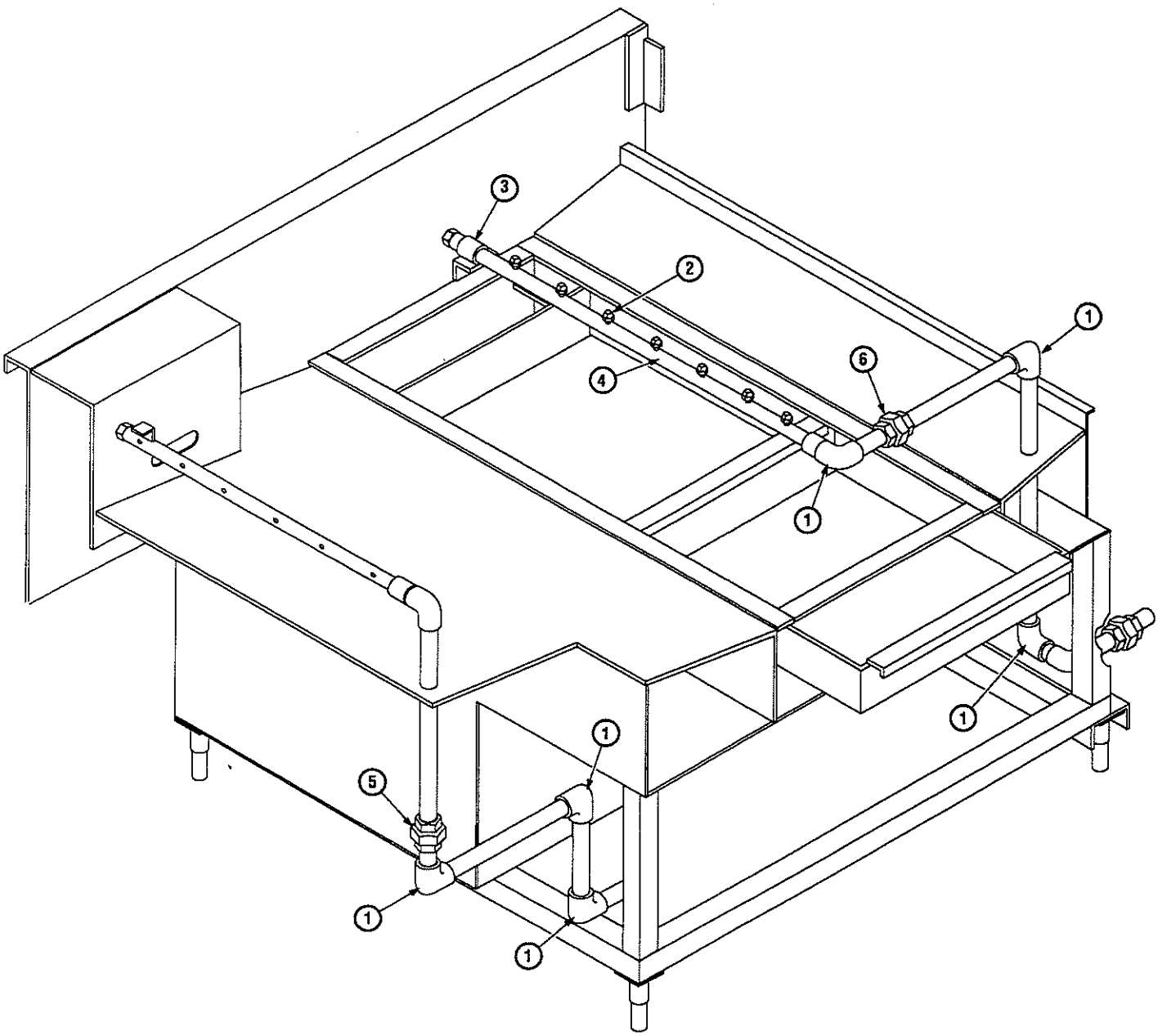

Figure 6. Prewash Spray Headers

Prewash Spray Headers

Call AMSCO Customer Service to Order Parts: 1-800-333-8848

ITEM NUMBER	PART NUMBER	DESCRIPTION	MANUFACTURER AND NUMBER	UNITS PER ASSEMBLY			
		UNITS WITH 24" CONVEYOR BELT		X			
		UNITS WITH 30" CONVEYOR BELT			X		
		UNITS WITH 36" CONVEYOR BELT				X	
1	910007-296	ELBOW, 90°, 1" NPT, S/S		6	6	6	
2	910006-078	JET, Spray Header	Bex F1/4-8020	1	1	1	
3	764324-478	PLUG, Pipe, White Nylon, 3/4" NPT	Parker N12HLP3/4"	1	1	1	
4		PIPE, Spray Header	Basil A6007-203	1	1	1	
		PIPE, Spray Header	Basil A6024-201	1	–	–	
		PIPE, Spray Header	Basil A6007-201	–	1	–	
		PIPE, Spray Header	Basil A6036-201	–	–	1	
5	910007-288	UNION, 1" NPT, S/S		1	1	1	

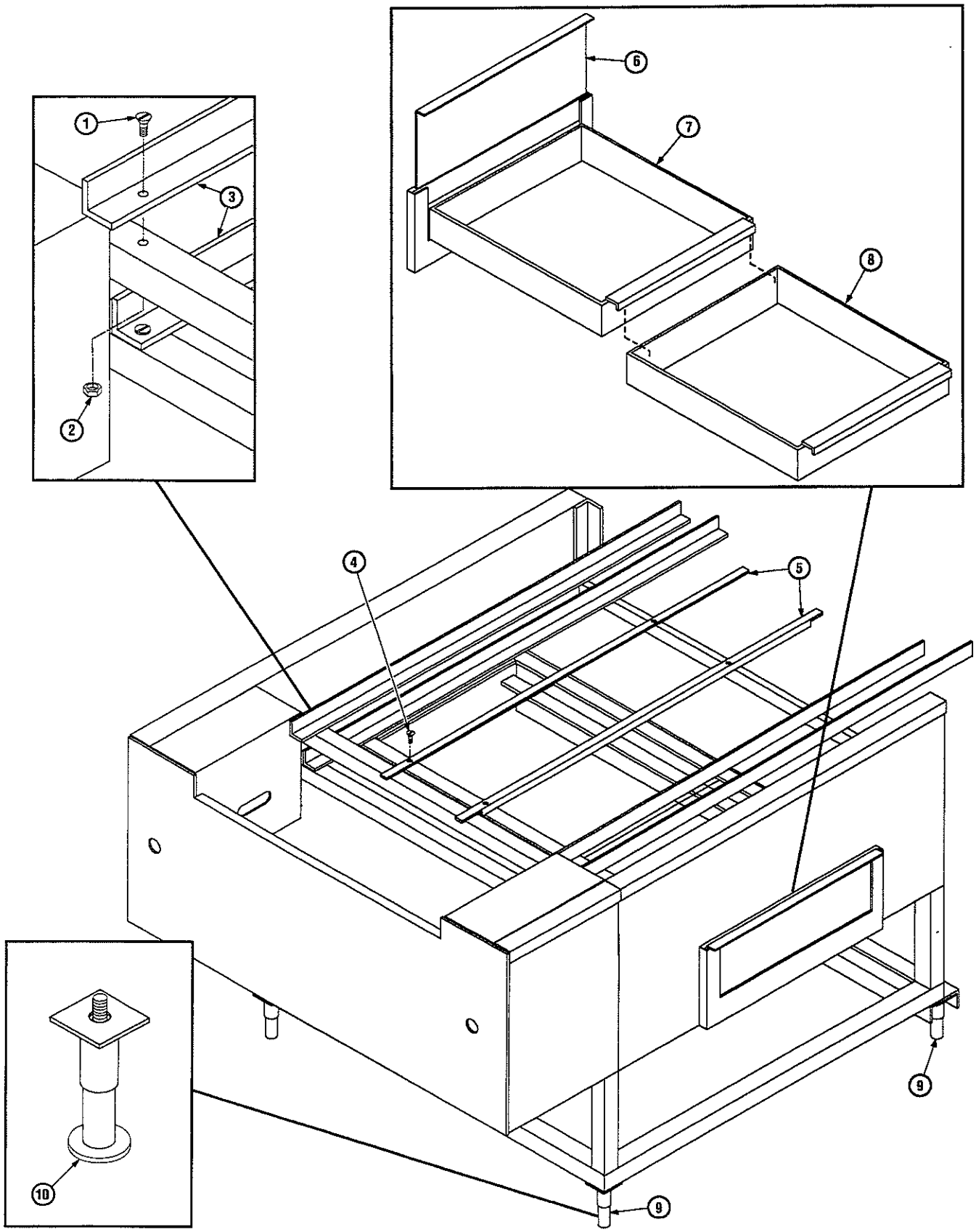

Figure 7. Prewash Cabinet - Lower

Prewash Cabinet - Lower

Call AMSCO Customer Service to Order Parts: 1-800-333-8848

ITEM NUMBER	PART NUMBER	DESCRIPTION	MANUFACTURER AND NUMBER	UNITS PER ASSEMBLY			
		UNITS WITH 24" CONVEYOR BELT		X			
		UNITS WITH 30" CONVEYOR BELT			X		
		UNITS WITH 36" CONVEYOR BELT				X	
1	75664-061	SCREW, Flat Head Machine, 1/4 – 20 x 1" Lg		1	1	1	
2	33226-062	NUT, Elastic, 1/4 – 20		1	1	1	
3		SUPPORT, Angle, 1" x 1" x 1/8", S/S		1	1	1	
4	910006-393	SCREW, Flat Head Machine, #10 – 24 x 3/4" Lg		4	4	4	
5		SUPPORT, Angle		2	2	2	
6		DOOR PANEL, Cleanout Port	Basil A6007-315	1	1	1	
7		SCREEN, Cleanout, Inner	Basil B6007-363MP	1	1	1	
8		SCREEN, Cleanout, Outer	Basil B6007-174MP	1	1	1	
9		LEG, Adjustable	Basil B6000-250	4	4	4	
10		PAD, Adjustable Leg	Basil A6007-241	4	4	4	

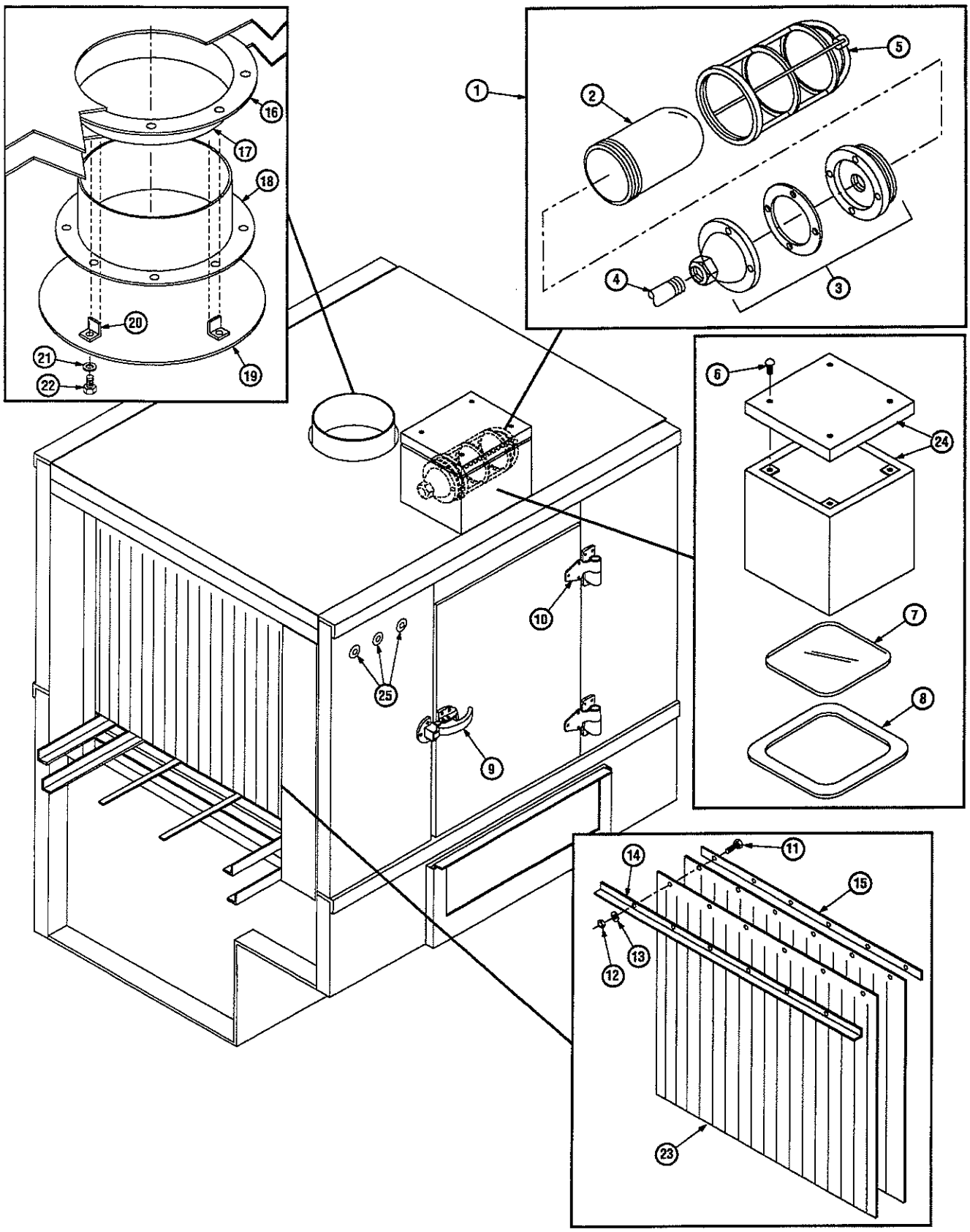

Figure 8. Wash/Acid Cabinet - Upper

Wash/Acid Cabinet - Upper

Call AMSCO Customer Service to Order Parts: 1-800-333-8848

ITEM NUMBER	PART NUMBER	DESCRIPTION	MANUFACTURER AND NUMBER	UNITS PER ASSEMBLY		
		UNITS WITH 24" CONVEYOR BELT		X		
		UNITS WITH 30" CONVEYOR BELT			X	
		UNITS WITH 36" CONVEYOR BELT				X
1	910006-336	ASSEMBLY, Light Fixture	Killark #NVA15GHG	1	1	1
2	761681-001	■ GLOBE, Glass 150W	Killark #VCGP-100	1	1	1
3	763632-002	■ FIXTURE, Cap	Killark #VFC-100	1	1	1
4	910006-778	■ NIPPLE CLOSE, 1/2" NPT, S/S		1	1	1
5	763632-004	■ PROTECTOR, Globe	Killark #VAG-100	1	1	1
6		SCREW		4	4	4
7	910001-393	WINDOW		1	1	1
8	764324-401	GASKET, Window	Neoprene, 4' Long	1	1	1
9	910008-770	LATCH, Surface Mount	Kason #930	1	1	1
10	910008-221	HINGE	Kason #1246-0000-28	2	2	2
11	124266-031	BOLT, Hex Head, 1/4" – 20 x 1-1/4" Lg, S/S		6	6	6
12	76239-061	NUT, Fin Hex, 1/4 – 20, S/S		6	6	6
13	129353-292	LOCK WASHER, 1/4", S/S		6	6	6
14		SUPPORT, Angle, 1-1/4 x 1-1/4 x 3/16 x 35-1/4" Lg, S/S		1	–	–
		SUPPORT, Angle, 1-1/4 x 1-1/4 x 3/16 x 41-1/4" Lg, S/S	Basil B6007-115	–	1	–
		SUPPORT, Angle, 1-1/4 x 1-1/4 x 3/16 x 47-1/4" Lg, S/S	Basil B6036-115	–	–	1
15		SUPPORT, Flat, 12 Ga. Strip, 1" x 35-1/4", S/S		1	–	–
		SUPPORT, Flat, 12 Ga. Strip, 1" x 41-1/4", S/S	Basi B6007-115l	–	1	–
		SUPPORT, Flat, 12 Ga. Strip, 1" x 47-1/4", S/S	Basil B6036-115	–	–	1
16		RING, Exhaust	Basil A6036-301	1	1	1
17		VENT, Exhaust	Basil A6036-300	1	1	1
18		■ ASSEMBLY, Exhaust Vent	Basil A6007-113	1	1	1
19		■ COVER, Vent	Basil B6007-3062	1	1	1
20		■ CLIP, Stack	Basil A3500-397	2	2	2
21		■ WASHER		2	2	2
22		■ BOLT		2	2	2
23		CURTAIN, Neoprene, 28-1/2 x 30-1/2 x 1/16" Thick	Basil	1	–	–
		CURTAIN, Neoprene, 34-1/2 x 30-1/2 x 1/16" Thick	Basil B6007-115	–	1	–
		CURTAIN, Neoprene, 40-1/2 x 30-1/2 x 1/16" Thick	Basil B6036-115	–	–	1
24		ENCLOSURE BOX, Skylight	Basil C4600-1432	1	1	1
25	910042-054	ASSEMBLY, Detergent Injection Extension		3	3	3

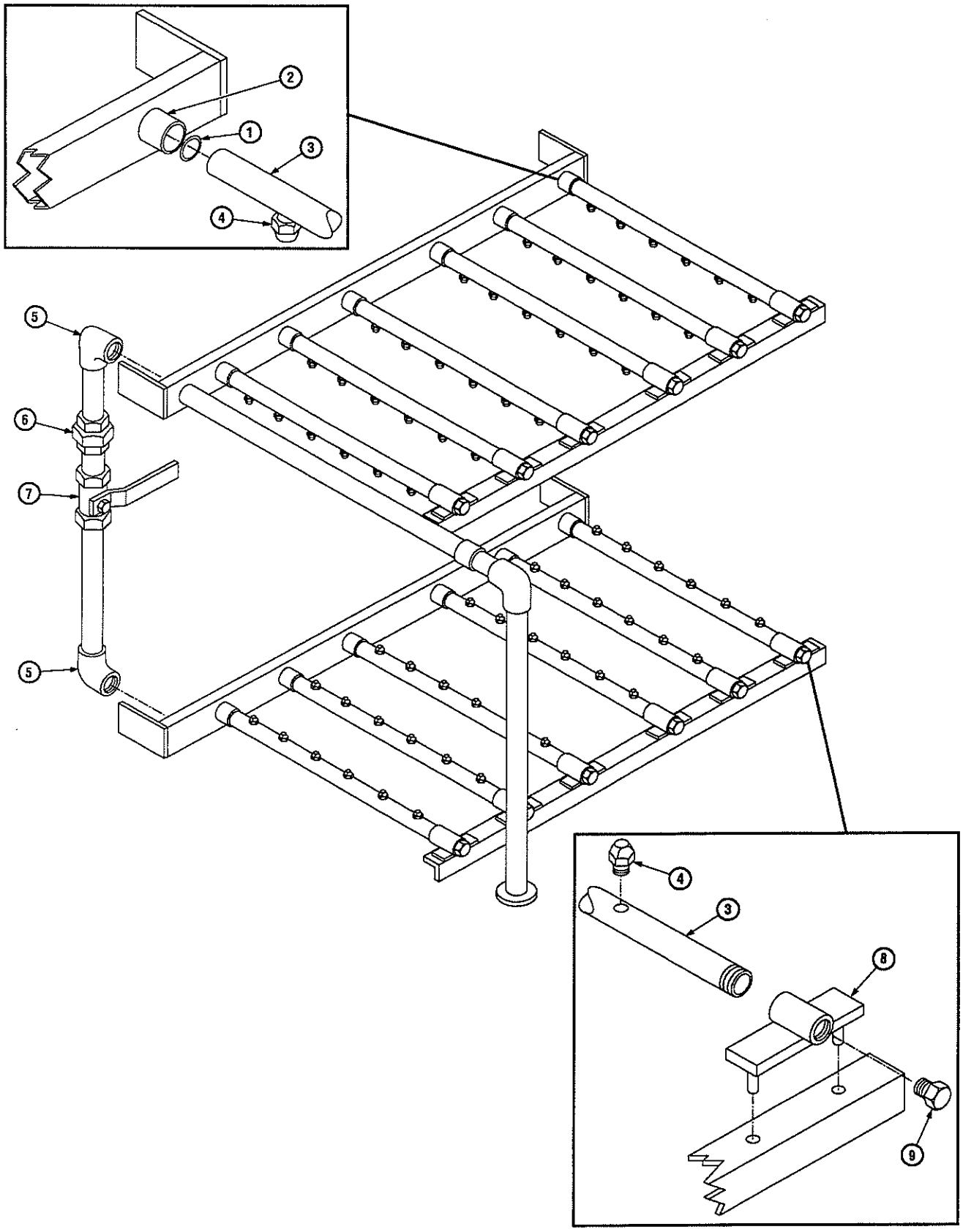

Figure 9. Wash/Acid Spray Headers

Wash/Acid Spray Headers

Call AMSCO Customer Service to Order Parts: 1-800-333-8848

ITEM NUMBER	PART NUMBER	DESCRIPTION	MANUFACTURER AND NUMBER	UNITS PER ASSEMBLY		
		UNITS WITH 24" CONVEYOR BELT		X		
		UNITS WITH 30" CONVEYOR BELT			X	
		UNITS WITH 36" CONVEYOR BELT				X
1		O-RING	A6000-241	1	1	1
2		WELDMENT, Header		1	1	1
3		PIPE, Spray Header	Basil A6024-200 (5JET)	12	–	–
		PIPE, Spray Header	Basil A6024-201 (6JET)	1	–	–
		PIPE, Spray Header	Basil A6007-200 (5JET)	–	12	–
		PIPE, Spray Header	Basil A6007-201 (6JET)	–	1	–
		PIPE, Spray Header	Basil A6036-200 (5JET)	–	–	12
		PIPE, Spray Header	Basil A6036-201 (6JET)	–	–	1
4	910006-089	JET, Spray Header	Bex 1/4-F8040-SS	1	1	1
5	910007-298	ELBOW, 90°, 2" NPT, S/S		2	2	2
6	910006-910	UNION, 2" NPT, S/S		1	1	1
7	910006-168	BALL VALVE, 2" NPT, S/S	Jamesbury 2-9NB-3636TT	1	1	1
	910006-169	■ KIT, Valve Repair, 2"				
	910006-185	■ BALL, Valve Repair, 2"				
	910006-186	■ STEM, Valve Repair, 2"				
8		HEADER, Mount	Basil B6007-134MP	1	1	1
9	764324-478	PLUG, Pipe, White Nylon, 3/4" NPT	Parker #NI2HPL3/4"	1	1	1

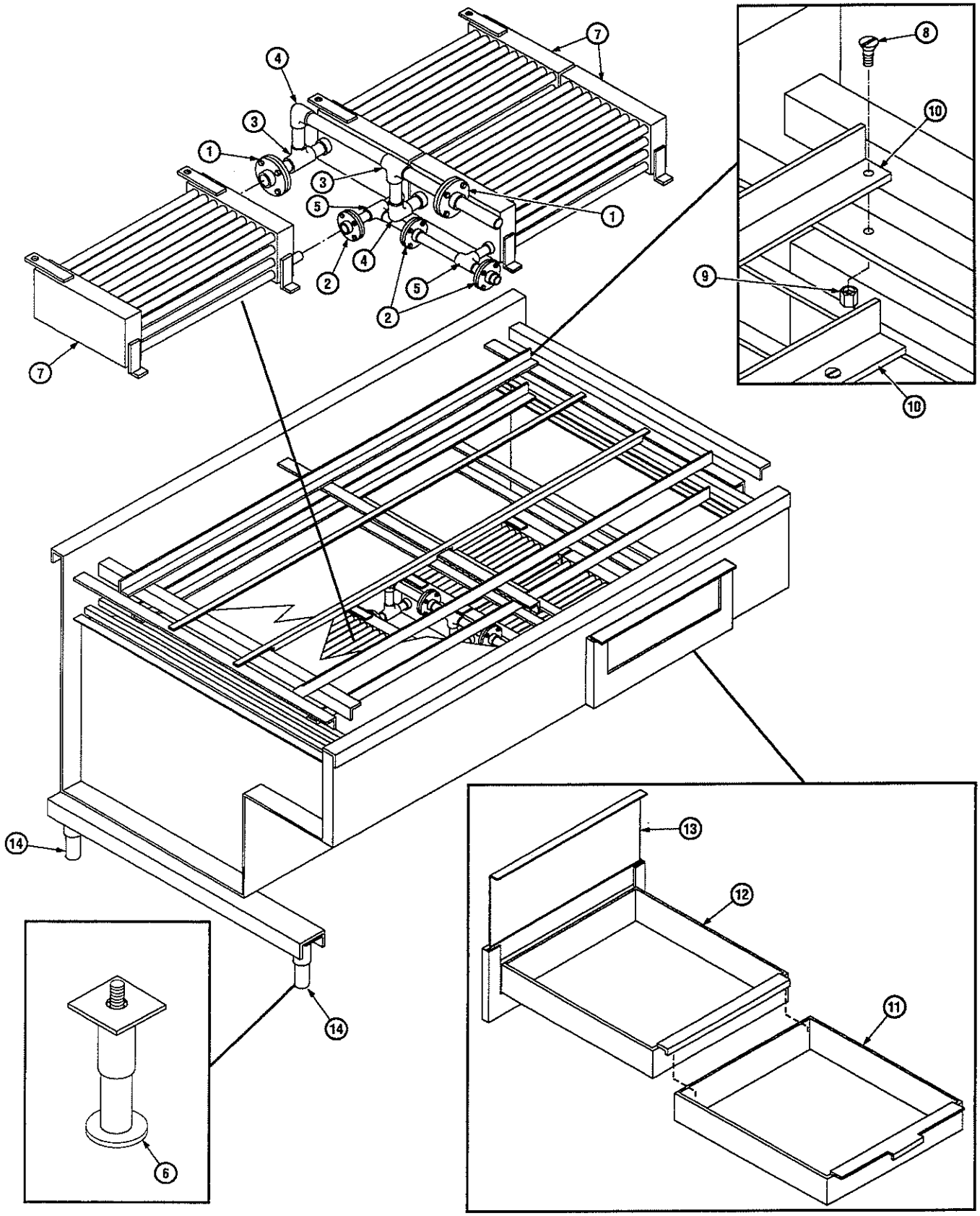

Figure 10. Wash/Acid Cabinet - Lower

Wash/Acid Cabinet - Lower

Call AMSCO Customer Service to Order Parts: 1-800-333-8848

ITEM NUMBER	PART NUMBER	DESCRIPTION	MANUFACTURER AND NUMBER	UNITS PER ASSEMBLY		
		UNITS WITH 24" CONVEYOR BELT		X		
		UNITS WITH 30" CONVEYOR BELT			X	
		UNITS WITH 36" CONVEYOR BELT				X
1	910006-621	FLANGE, Screw on 1" ID, S/S		2	2	2
	910006-652	■ GASKET, 1" ID Full Face, 1/16" Thick		2	2	2
2	910006-625	FLANGE, Screw on 3/4" ID, S/S		3	3	3
	910006-653	■ GASKET, 3/4" ID		3	3	3
3	910007-293	TEE, 1" NPT, S/S		2	2	2
4	910007-296	ELBOW, 90°, 1" NPT, S/S		2	2	2
5	910007-294	TEE, 3/4" NPT, S/S		2	2	2
6		PAD, Adjustable Leg	Basil A6007-241	2	2	2
7	910082-001	COIL, Sump, Steam*	Basil D6007-194	3	3	3
8	75664-061	SCREW, Flat Head Machine, 1/4 – 20 x 1" Lg, S/S		1	1	1
9	33226-062	NUT, Elastic, 1/4 – 20, S/S		1	1	1
10		ANGLE, Support, 1" x 1" x 1/8", S/S		4	4	4
11		SCREEN, Cleanout, Outer	Basil B6007-175MP	1	1	1
12		SCREEN, Cleanout, Inner	Basil A6007-364MP	1	1	1
13		DOOR PANEL, Cleanout Port	Basil A6007-329	1	1	1
14		LEG, Adjustable	Basil B6000-250	2	2	2
	910007-295	ELBOW, 90°, 3/4" NPT, S/S (Not Shown)		1	1	1

* Verify the coil to be D6007-194, reference the Bill of Material provided with unit. Contact AMSCO's Service Department if coil is different.

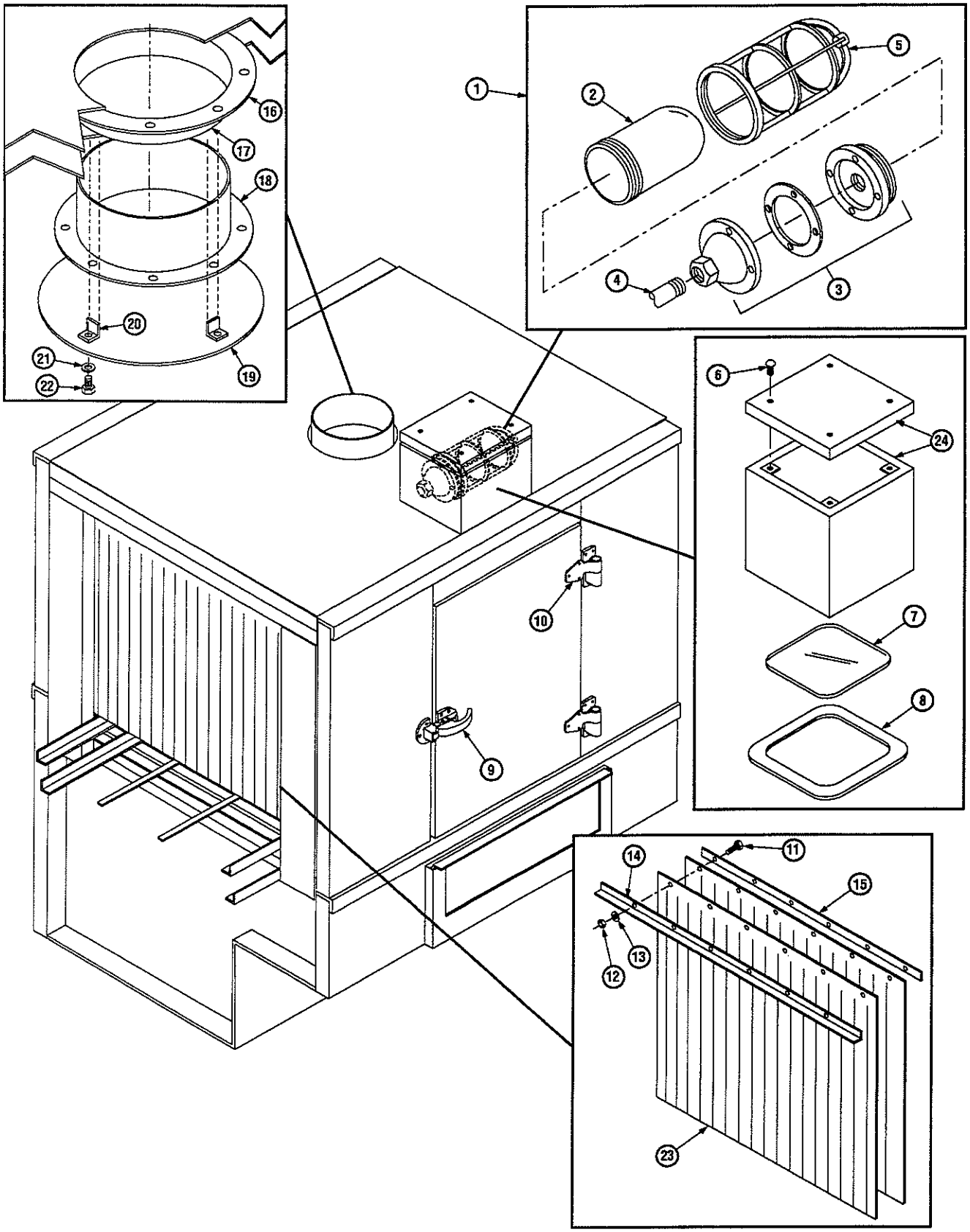

Figure 11. Rinse Cabinet - Upper

Rinse Cabinet - Upper

Call AMSCO Customer Service to Order Parts: 1-800-333-8848

ITEM NUMBER	PART NUMBER	DESCRIPTION	MANUFACTURER AND NUMBER	UNITS PER ASSEMBLY			
		UNITS WITH 24" CONVEYOR BELT		X			
		UNITS WITH 30" CONVEYOR BELT			X		
		UNITS WITH 36" CONVEYOR BELT				X	
1	910006-336	ASSEMBLY, Light Fixture	Killark #NVA15GHG	1	1	1	
2	761681-001	■ GLOBE, Glass 150W	Killark #VCGP-100	1	1	1	
3	763632-002	■ FIXTURE, Cap	Killark#VFC-100	1	1	1	
4	910006-778	■ NIPPLE CLOSE, 1/2" NPT, S/S		1	1	1	
5	763632-004	■ PROTECTOR, Globe	Killark #VAG-100	1	1	1	
6		SCREW		4	4	4	
7	910001-393	WINDOW		1	1	1	
8	764324-401	GASKET, Window	Neoprene, 4' Long	1	1	1	
9	910008-770	LATCH, Surface Mount	Kason #930	1	1	1	
10	910008-221	HINGE	Kason #1246-0000-28	2	2	2	
11	910006-434	BOLT, Hex Head, 1/4 – 20 x 1-1/2" Lg, S/S		6	6	6	
12	76239-061	NUT, Fin Hex, 1/4 – 20, S/S		6	6	6	
13	129353-292	LOCK WASHER, 1/4", S/S		6	6	6	
14		SUPPORT, Angle, 1-1/4 x 1-1/4 x 3/16 x 35-1/4" Lg, S/S		1	–	–	
		SUPPORT, Angle, 1-1/4 x 1-1/4 x 3/16 x 41-1/4" Lg, S/S	Basil B6007-115	–	1	–	
		SUPPORT, Angle, 1-1/4 x 1-1/4 x 3/16 x 47-1/4" Lg, S/S	Basil B6036-115	–	–	1	
15		SUPPORT, Flat, 12 Ga. Strip, 1" x 35-1/4", S/S		1	–	–	
		SUPPORT, Flat, 12 Ga. Strip, 1" x 41-1/4", S/S	Basil B6007-115	–	1	–	
		SUPPORT, Flat, 12 Ga. Strip, 1" x 47-1/4", S/S	Basil B6036-115	–	–	1	
16		RING, Exhaust	Basil A6036-301	1	1	1	
17		VENT, Exhaust	Basil A6036-300	1	1	1	
18		■ ASSEMBLY, Exhaust Vent	Basil A6007-113	1	1	1	
19		■ COVER, Vent	Basil B6007-3062	1	1	1	
20		■ CLIP, Stack	Basil A3500-397	2	2	2	
21		■ WASHER		2	2	2	
22		■ BOLT		2	2	2	
23		CURTAIN, Neoprene, 28-1/2 x 30-1/2 x 1/16" Thick	Basil	1	–	–	
		CURTAIN, Neoprene, 34-1/2 x 30-1/2 x 1/16" Thick	Basil B6007-115	–	1	–	
		CURTAIN, Neoprene, 40-1/2 x 30-1/2 x 1/16" Thick	Basil B6036-115	–	–	1	
24		ENCLOSURE BOX, Skylight	Basil C4600-1432	1	1	1	

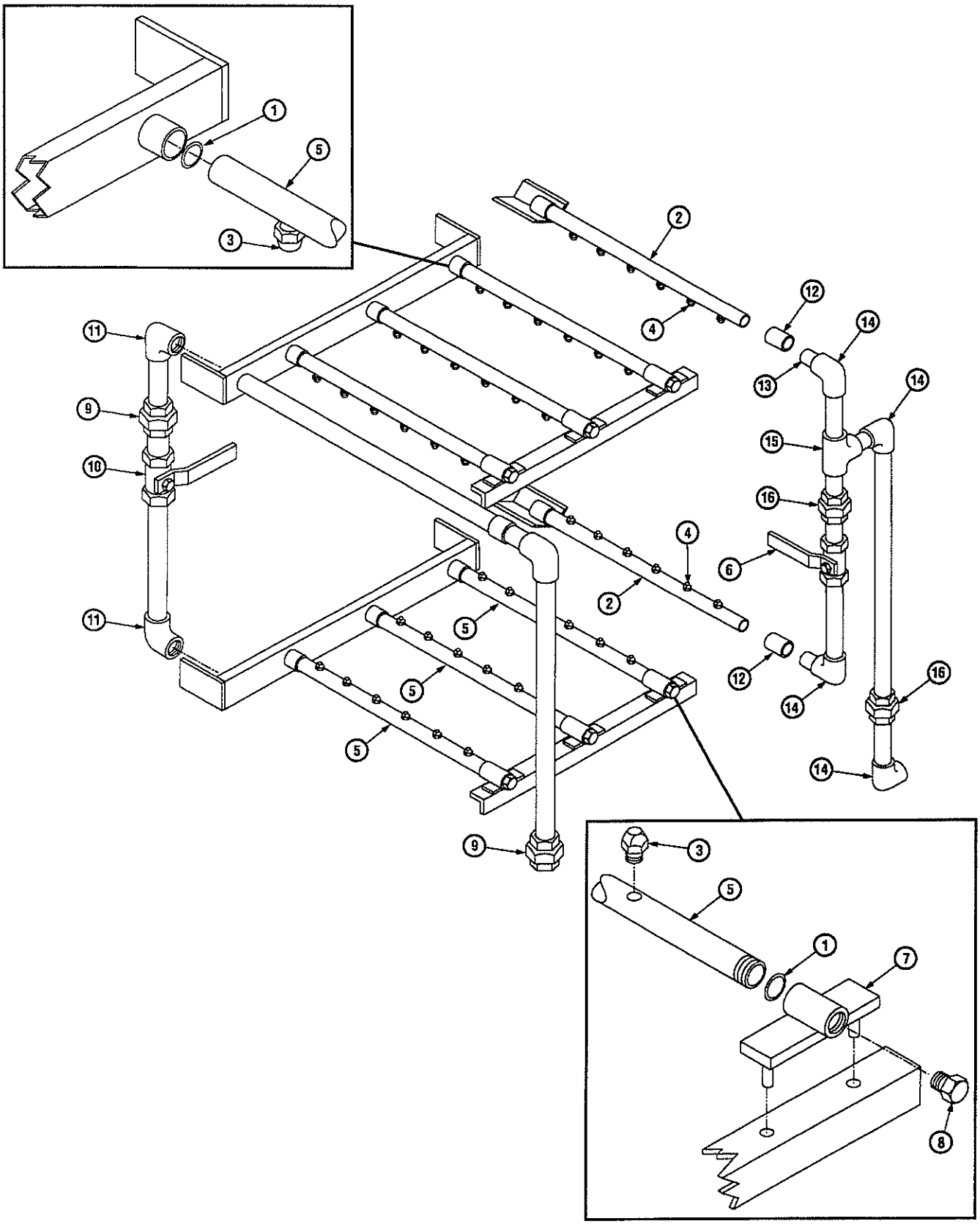

Figure 12. Rinse/Final Rinse Spray Headers

Rinse/Final Rinse Spray Headers

Call AMSCO Customer Service to Order Parts: 1-800-333-8848

ITEM NUMBER	PART NUMBER	DESCRIPTION	MANUFACTURER AND NUMBER	UNITS PER ASSEMBLY			
		UNITS WITH 24" CONVEYOR BELT		X			
		UNITS WITH 30" CONVEYOR BELT			X		
		UNITS WITH 36" CONVEYOR BELT				X	
1		O-RING, Header	Basil A6000-241	6	6	6	
2		PIPE, Spray Header	Basil A6024-202	2	–	–	
		PIPE, Spray Header	Basil A6007-202	–	2	–	
		PIPE, Spray Header	Basil A6036-202	–	–	2	
3	910006-198	JET, Rinse	Bex F1/4-8030	1	1	1	
4	910006-199	JET, Rinse	Bex F1/4-8015	1	1	1	
5		PIPE, Spray Header	Basil A6024-200	6	–	–	
		PIPE, Spray Header	Basil A6007-200	–	6	–	
		PIPE, Spray Header	Basil A6036-200	–	–	6	
		PIPE, Spray Header	Basil A6024-201	1	–	–	
		PIPE, Spray Header	Basil A6007-201	–	1	–	
		PIPE, Spray Header	Basil A6036-201	–	–	1	
6	910006-170	BALL VALVE, 3/4" NPT, S/S	Jamesbury 3/4-9NB-3636TT	1	1	1	
	910006-171	■ KIT, Valve Repair, 3/4"					
	910006-181	■ BALL, Valve Repair, 3/4"					
	910006-182	■ STEM, Valve Repair, 3/4"					
7		HEADER, Mount	Basil A6007-134MP	6	6	6	
8	764324-478	PLUG, Pipe, White Nylon, 3/4" NPT	Parker N12HLP 3/4"	6	6	6	
9	910006-729	UNION, 1-1/2" NPT, S/S		2	2	2	
10	910006-166	BALL VALVE, 1-1/2" NPT, S/S	Jamesbury 1-1/2-9NB-3636TT	1	1	1	
	910006-167	■ KIT, Valve Repair, 1-1/2"					
	910006-183	■ BALL, Valve Repair, 1-1/2"					
	910006-184	■ STEM, Valve Repair, 1-1/2"					
11	910006-730	ELBOW, 90°, 1-1/2" NPT, S/S		3	3	3	
12		HEADER, Pipe Mount		2	2	2	
13	910006-766	NIPPLE, Close, 3/4" NPT, S/S		2	2	2	
14	910007-295	ELBOW, 90°, 3/4" NPT, S/S		4	4	4	
15	910007-294	TEE, 3/4" NPT, S/S		1	1	1	
16	910007-289	UNION, 3/4" NPT, S/S		2	2	2	

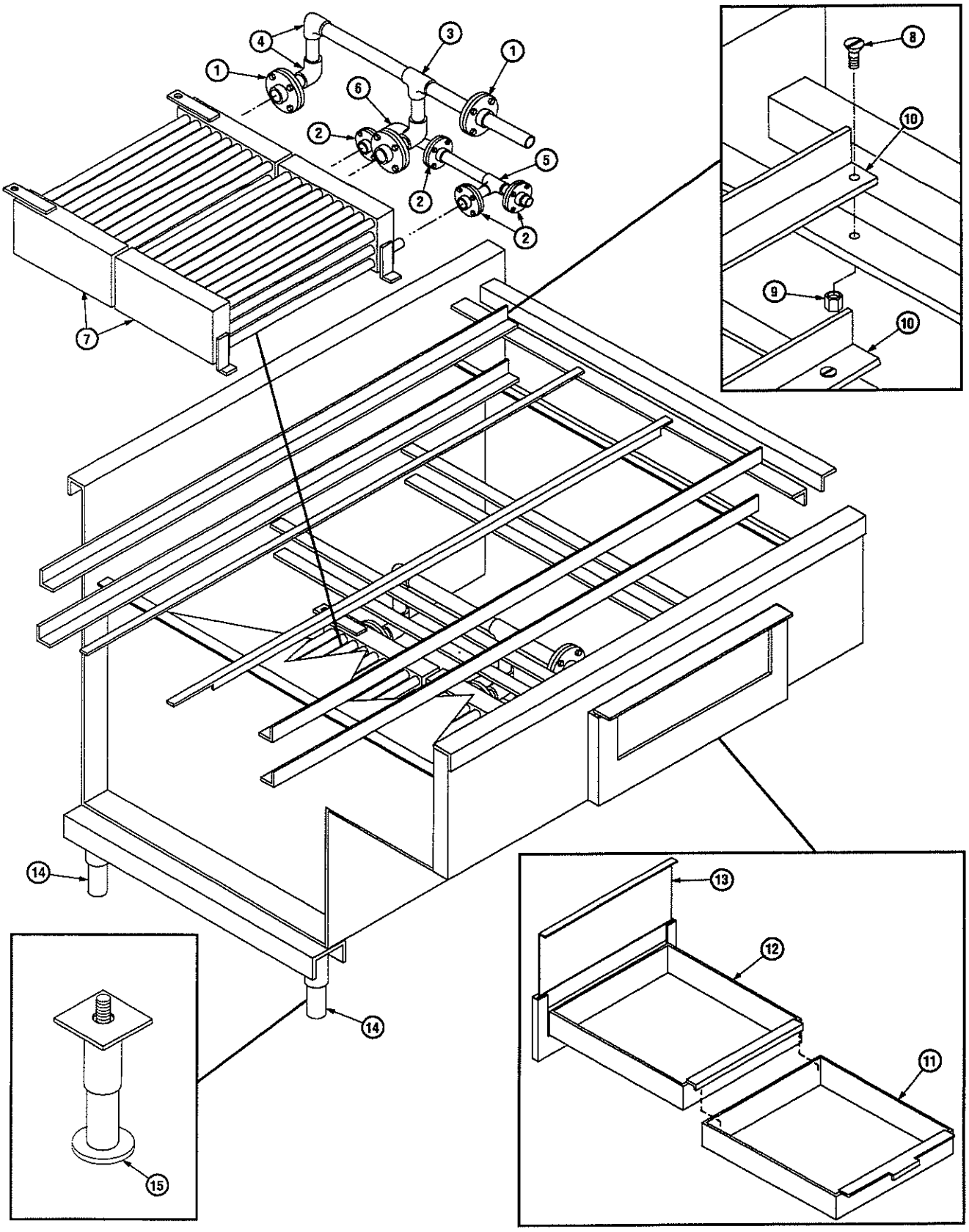

Figure 13. Rinse Cabinet - Lower

Rinse Cabinet - Lower

Call AMSCO Customer Service to Order Parts: 1-800-333-8848

ITEM NUMBER	PART NUMBER	DESCRIPTION	MANUFACTURER AND NUMBER	UNITS PER ASSEMBLY			
		UNITS WITH 24" CONVEYOR BELT		X			
		UNITS WITH 30" CONVEYOR BELT			X		
		UNITS WITH 36" CONVEYOR BELT				X	
1	910006-621	FLANGE, Screw on 1" ID, S/S		2	2	2	
	910006-652	■ GASKET, 1" ID Full Face, 1/16" Thick		2	2	2	
2	910006-625	FLANGE, Screw on 3/4" ID, S/S		4	4	4	
	910006-653	■ GASKET, 3/4" ID		4	4	4	
3	910007-293	TEE, 1" NPT, S/S		1	1	1	
4	910007-296	ELBOW, 90°, 1" NPT, S/S		2	2	2	
5	910007-294	TEE, 3/4" NPT, S/S		1	1	1	
6	910007-295	ELBOW, 90°, 3/4" NPT, S/S		1	1	1	
7	910082-001	COIL, Sump, Steam*	Basil D6007-194	2	2	2	
8	75664-061	SCREW, Flat Head Machine, 1/4 – 20 x 1" Lg, S/S		1	1	1	
9	33226-062	NUT, Elastic, 1/4 – 20, S/S		1	1	1	
10		SUPPORT, Angle, 1" x 1" x 1/8", S/S		2	2	2	
11		SCREEN, Cleanout, Outer	Basil B6007-175MP	1	1	1	
12		SCREEN, Cleanout, Inner	Basil A6007-364MP	1	1	1	
13		DOOR PANEL, Cleanout Port	Basil A6007-329	1	1	1	
14		LEG, Adjustable	Basil B6000-250	2	2	2	
15		PAD, Adjustable Leg	Basil A6007-241	2	2	2	

* Verify the coil to be D6007-194, reference the Bill of Material provided with unit. Contact AMSCO's Service Department if coil is different.

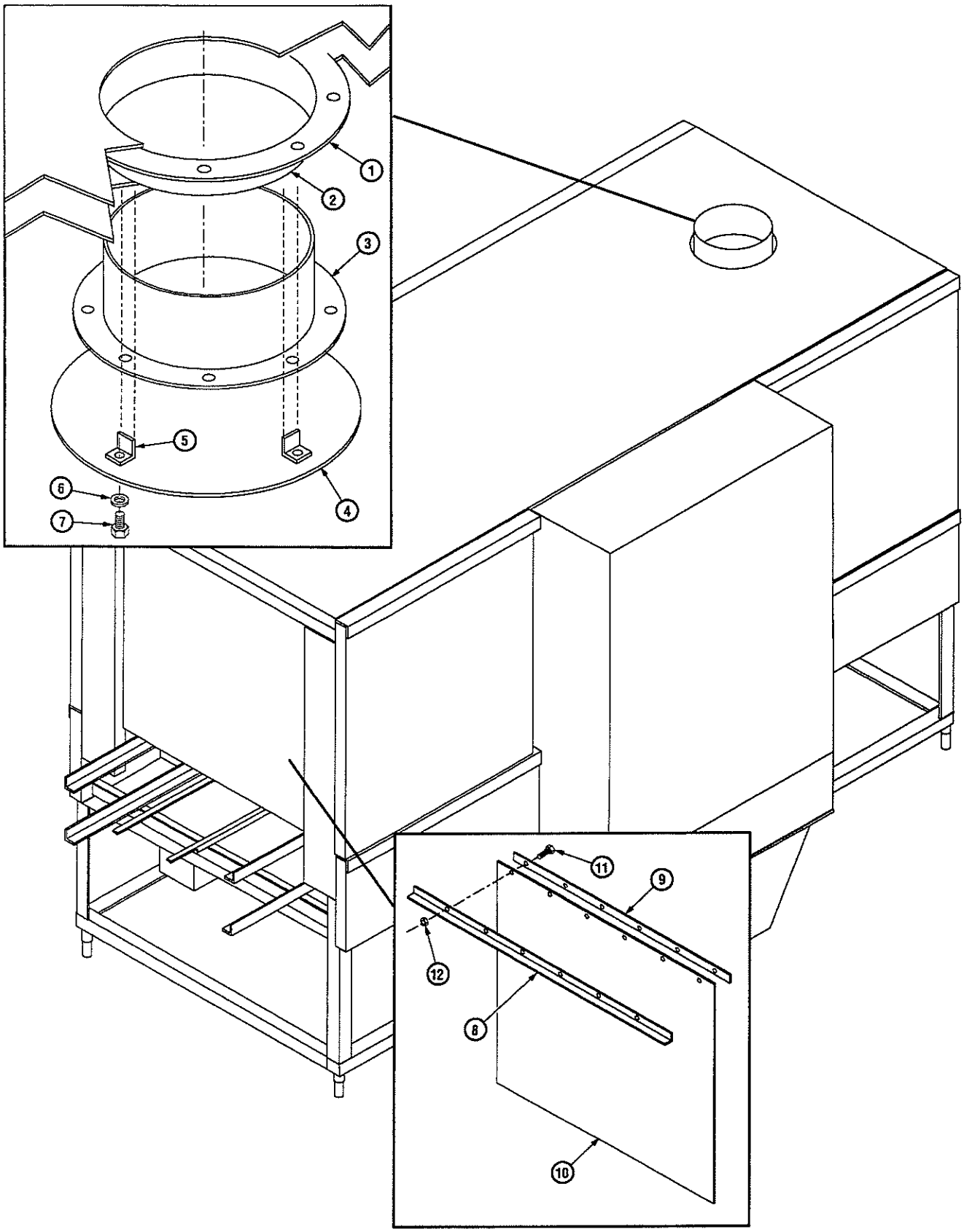

Figure 14. Dry Cabinet - Upper

Dry Cabinet - Upper

Call AMSCO Customer Service to Order Parts: 1-800-333-8848

ITEM NUMBER	PART NUMBER	DESCRIPTION	MANUFACTURER AND NUMBER	UNITS PER ASSEMBLY			
		UNITS WITH 24" CONVEYOR BELT		X			
		UNITS WITH 30" CONVEYOR BELT			X		
		UNITS WITH 36" CONVEYOR BELT				X	
1		RING, Exhaust	Basil A6036-301	1	1	1	
2		VENT, Exhaust	Basil A6036-300	1	1	1	
3		■ ASSEMBLY, Exhaust Vent	Basil A6007-113	1	1	1	
4		■ COVER, Vent	Basil B6007-3062	1	1	1	
5		■ CLIP, Stack	Basil A3500-397	2	2	2	
6		■ WASHER		2	2	2	
7		■ BOLT		2	2	2	
8		SUPPORT, Angle, 1-1/4 x 1-1/4 x 3/16 x 35-1/4" Lg, S/S		1	–	–	
		SUPPORT, Angle, 1-1/4 x 1-1/4 x 3/16 x 41-1/4" Lg, S/S	Basil B6007-114	–	1	–	
		SUPPORT, Angle, 1-1/4 x 1-1/4 x 3/16 x 47-1/4" Lg, S/S	Basil B6036-114	–	–	1	
9		SUPPORT, Flat, 12 Ga. Strip, 1" x 35-1/4", S/S		1	–	–	
		SUPPORT, Flat, 12 Ga. Strip, 1" x 41-1/4", S/S	Basil B6007-114	–	1	–	
		SUPPORT, Flat, 12 Ga. Strip, 1" x 47-1/4", S/S	Basil B6036-114	–	–	1	
10		CURTAIN, Neoprene, 28-1/2 x 18-1/2 x 1/16" Thick	Basil	1	–	–	
		CURTAIN, Neoprene 34-1/2 x 18-1/2 x 1/16" Thick	Basil B6007-114	–	1	–	
		CURTAIN, Neoprene, 40-1/2 x 18-1/2 x 1/16" Thick	Basil B6036-114	–	–	1	
11	81667-009	BOLT, Hex Head, 1/4 – 20 x 1-1/2" Lg		6	6	6	
12	76239-061	NUT, Fin Hex Head, 1/4 – 20, S/S.		6	6	6	

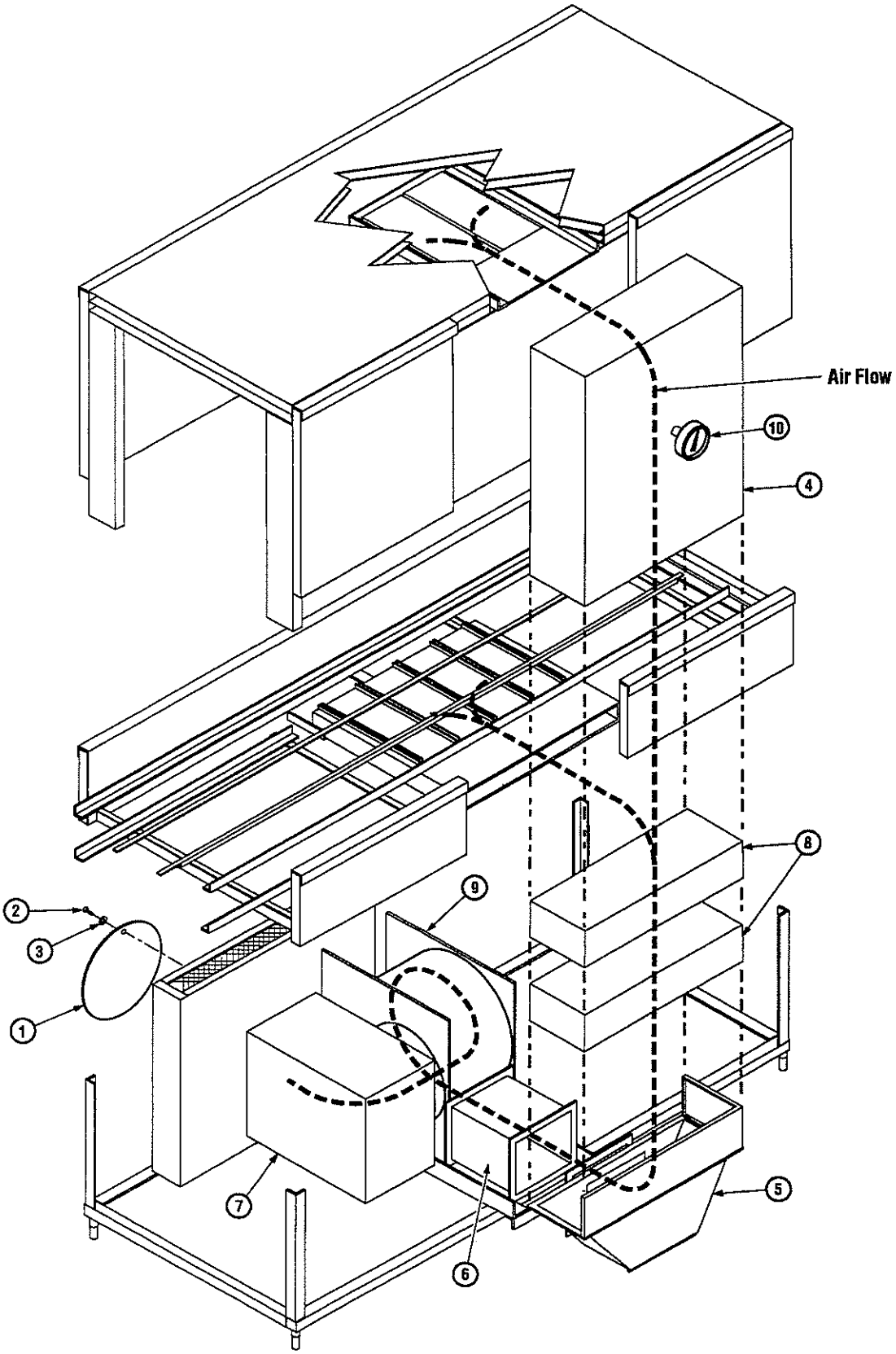

Figure 15. Plenum Airflow

Plenum Airflow

Call AMSCO Customer Service to Order Parts: 1-800-333-8848

ITEM NUMBER	PART NUMBER	DESCRIPTION	MANUFACTURER AND NUMBER	UNITS PER ASSEMBLY			
		UNITS WITH 24" CONVEYOR BELT		X			
		UNITS WITH 30" CONVEYOR BELT			X		
		UNITS WITH 36" CONVEYOR BELT				X	
1		PLATE, Cover Rec. Plenum	Basil A6007-3135	1	1	1	
2		BOLT		1	1	1	
3		WASHER		1	1	1	
4		PLENUM, Dryer Discharge	Basil B6007-143	1	1	1	
5		PLENUM, Blower Discharge	Basil B6007-142	1	1	1	
6		PLENUM, Blower	Basil B6007-141MP	1	1	1	
7		PLENUM, Suction	Basil B6007-140	1	1	1	
8	910042-057	COIL, Dryer (6' dryer)	Trane Type T, 12 x 36-LH, 150-Fins/Ft	1	1	1	
	910042-058	COIL, Dryer (6' dryer)	Trane Type T, 12 x 36-RH, 150-Fins/Ft	1	1	1	
	910042-059	COIL, Dryer (10' dryer)	Trane Type T, 12 x 60-LH, 150-Fins/Ft				
	910042-060	COIL, Dryer (10' dryer)	Trane Type T, 12 x 60-RH, 150-Fins/Ft				
9	910006-636	BLOWER, Discharge	Chicago Blower #SQA-12-1/4-5HP	1	1	1	
10	910006-297	GAUGE, Temperature	Trend #33040	1	1	1	
	910008-226	FITTING, Grease, 1/8" NPT Male (Not Shown)					
	910008-485	FITTING, Bulk Head (Not Shown)					
	910008-494	TUBING, Polypropylene (Not Shown)					

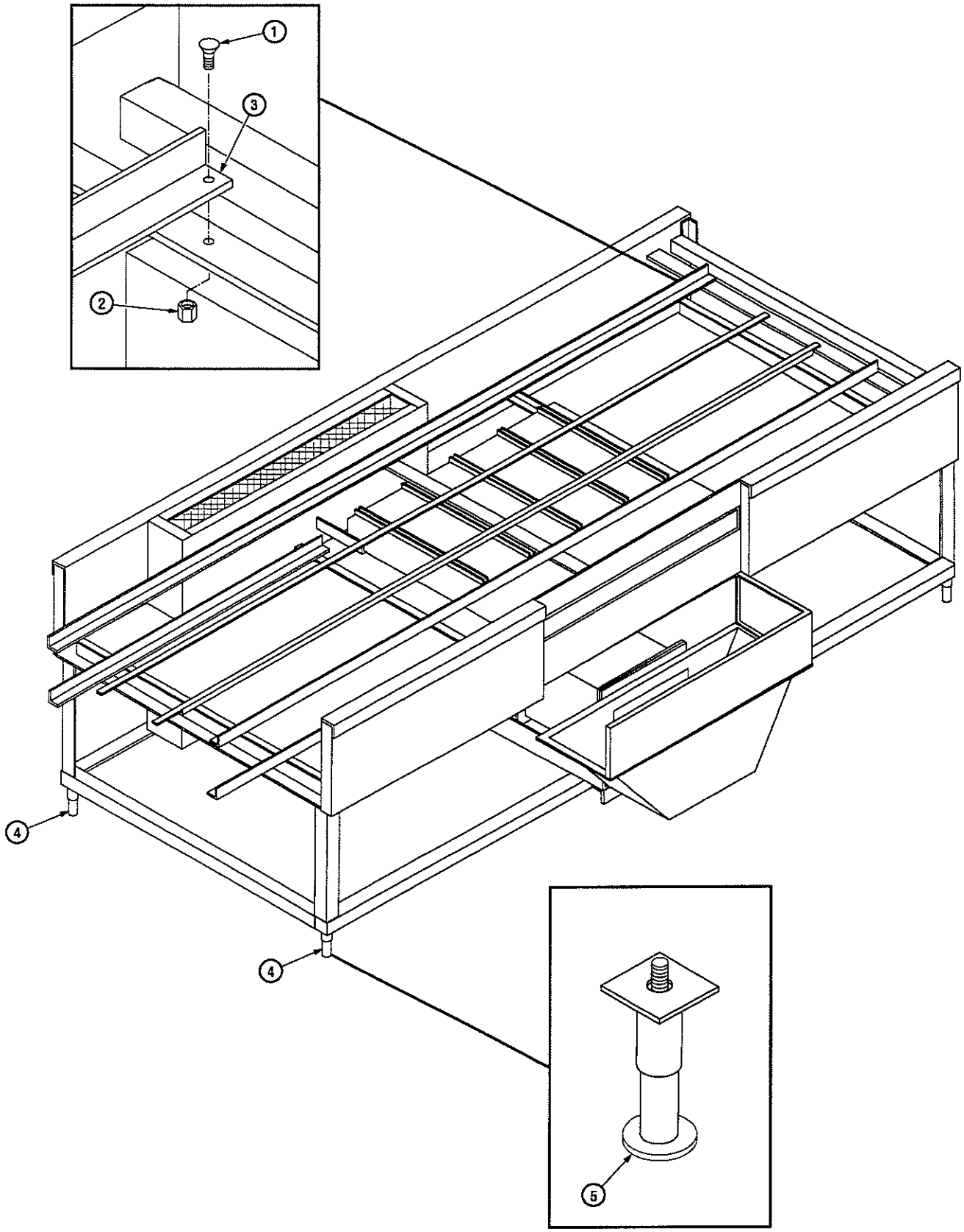

Figure 16. Dry Cabinet - Lower

Dry Cabinet - Lower

Call AMSCO Customer Service to Order Parts: 1-800-333-8848

ITEM NUMBER	PART NUMBER	DESCRIPTION	MANUFACTURER AND NUMBER	UNITS PER ASSEMBLY			
		UNITS WITH 24" CONVEYOR BELT		X			
		UNITS WITH 30" CONVEYOR BELT			X		
		UNITS WITH 36" CONVEYOR BELT				X	
1	75664-061	SCREW, Flat C'sink Head, 1/4 – 20 x 1" Lg, S/S		1	1	1	
2	33226-062	NUT, Elastic, 1/4 – 20, S/S		1	1	1	
3		ANGLE, Belt Support, 2" x 2", S/S		1	1	1	
4		LEG, Adjustable	Basil B6000-250	4	4	4	
5		PAD, Adjustable Leg	Basil A6007-241	4	4	4	

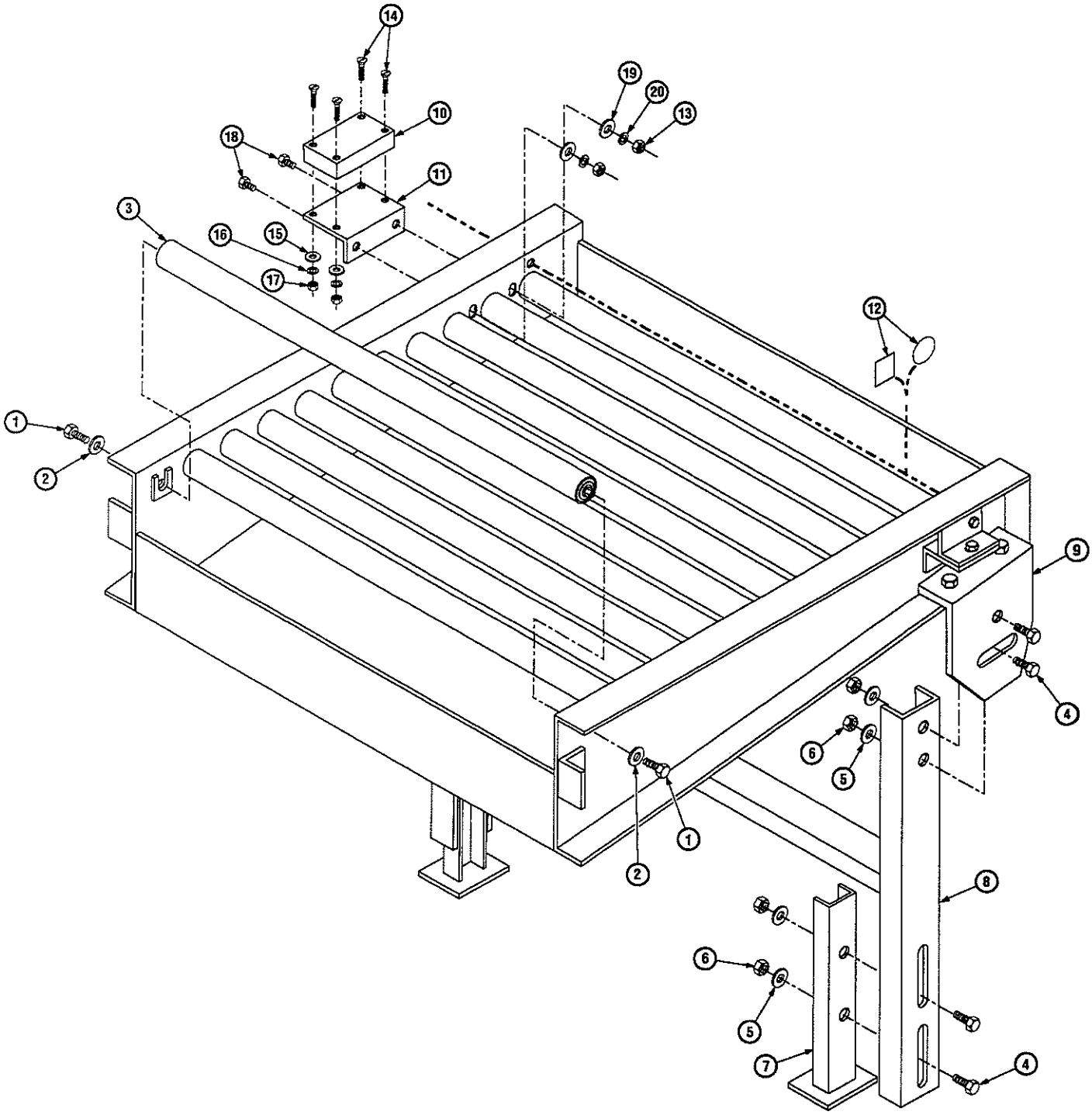

Figure 17. Unload End

Unload End

Call AMSCO Customer Service to Order Parts: 1-800-333-8848

ITEM NUMBER	PART NUMBER	DESCRIPTION	MANUFACTURER AND NUMBER	UNITS PER ASSEMBLY			
		UNITS WITH 24" CONVEYOR BELT		X			
		UNITS WITH 30" CONVEYOR BELT			X		
		UNITS WITH 36" CONVEYOR BELT				X	
1	124266-028	BOLT, Hex Head, 1/4 – 20 x 3/4", S/S		2	2	2	
2	49134-061	WASHER, Flat, 1/4", S/S		2	2	2	
3		ROLLER	Basil B6007-197MP	11	11	11	
4	150475-586	BOLT, Hex Head, 5/16" – 18 UNC x 1" Lg, S/S		4	4	4	
5	708551-001	WASHER, Flat, 5/16", S/S		4	4	4	
6	101000-200	NUT, Hex Head, 5/16" – 18 UNC, S/S		4	4	4	
7		BRACKET, Roller Stand	Basil B6000-391	1	1	1	
8		BRACKET, Roller Stand	Basil B6000-390	1	1	1	
9		PLATE, Roller Stand Support	Basil A6000-362	1	1	1	
10	910006-373	PHOTO EYE	Mekontrol #MEK90-PAR	1	1	1	
11		BRACKET, Photo Eye	Basil B6007-3231	1	1	1	
12	910006-374	REFLECTOR, 1-1/2" Dia.	Mekontrol #K3568	1	1	1	
	910006-375	REFLECTOR, 2" Square	Mekontrol #K-9001	1	1	1	
13	708656-001	NUT, Hex Head, #10 – 32, S/S		2	2	2	
14	910006-410	SCREW, Pan Head Machine, #6 – 32 x 1-1/2" Lg, S/S		4	4	4	
15	81673-004	WASHER, Flat, #6 – 32, S/S		4	4	4	
16	19684-061	LOCK WASHER, #6 – 32, S/S		4	4	4	
17	118432-061	NUT, Hex Head, #6 – 32, S/S		4	4	4	
18	90204-061	SCREW, Hex Head Machine, #10 – 32 x 3/4" Lg, S/S		2	2	2	
19	84114-004	WASHER, #10 – 32, S/S		2	2	2	
20	19685-061	LOCK WASHER, #10 – 32, S/S		2	2	2	
		DEFLECTOR, Reflector (Not Shown)	Basil A6007-3222	1	1	1	

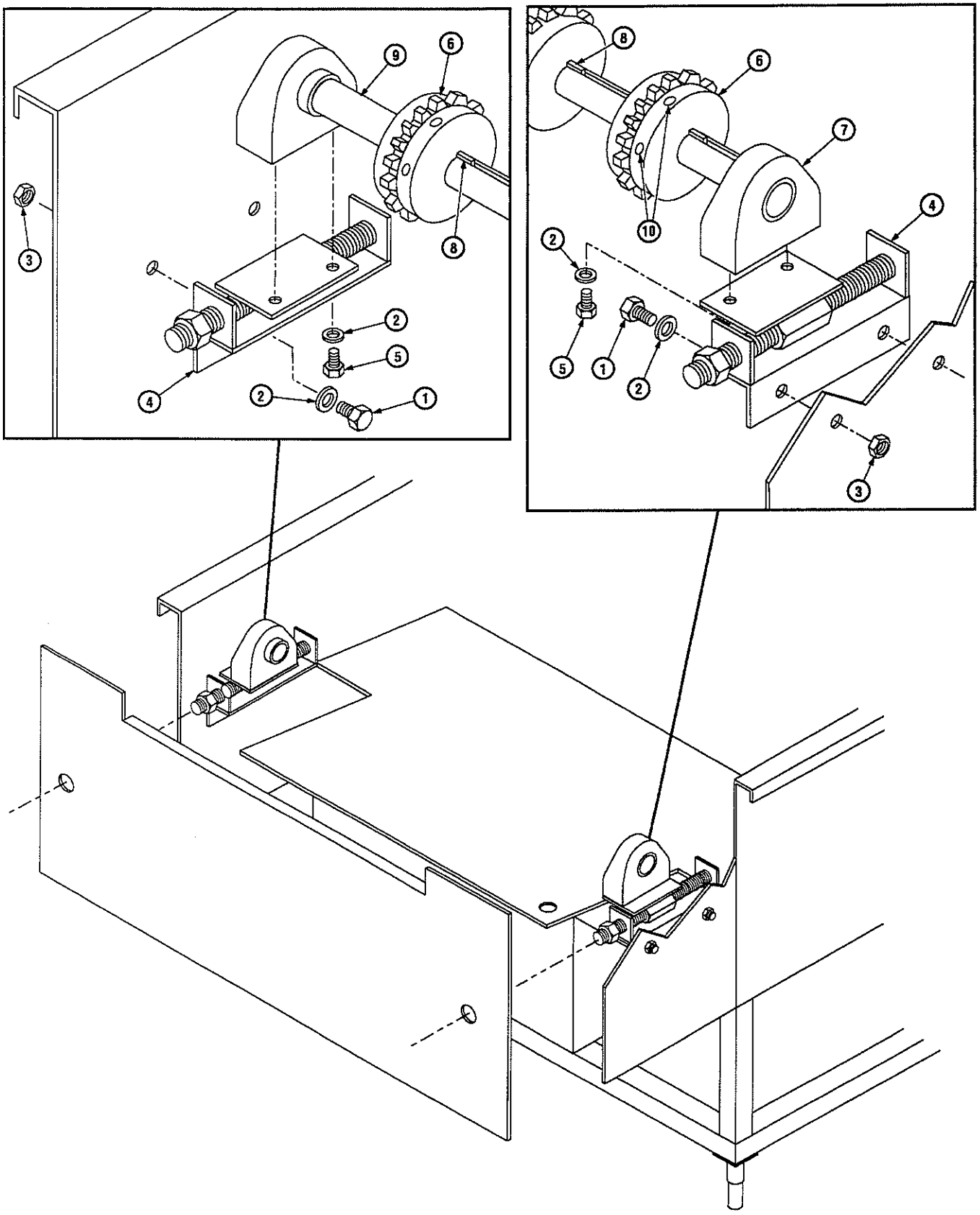

Figure 18. Conveyor Adjustment

Conveyor Adjustment

Call AMSCO Customer Service to Order Parts: 1-800-333-8848

ITEM NUMBER	PART NUMBER	DESCRIPTION	MANUFACTURER AND NUMBER	UNITS PER ASSEMBLY			
		UNITS WITH 24" CONVEYOR BELT		X			
		UNITS WITH 30" CONVEYOR BELT			X		
		UNITS WITH 36" CONVEYOR BELT				X	
1	910008-937	BOLT, Hex Head Cap, 1/2" – 20 UNF x 1"		4	4	4	
2		LOCK WASHER, 1/2", S/S		8	8	8	
3		NUT, Fin Hex, 1/2" – 20 UNF		4	4	4	
4		ASSEMBLY, Take Up	Basil C6007-116	2	2	2	
5		BOLT, Hex Head Cap, 1/2" – 20 UNC x 3/4"		4	4	4	
6		SPROCKET, Belt	Basil B6007-232 REF: Cambridge #230000580 UHMW, 6" Dia., 18T., Class "C"	6	6	6	
7	910006-650	BEARING, Pillow Block, 1-1/2" Bore	McGill #TBC-25	2	2	2	
8		KEY STOCK	Basil A6007-233	6	6	6	
9		SHAFT, Idler, 24"	Basil A6024-213	1	–	–	
		SHAFT, Idler, 30"	Basil A6007-213	–	1	–	
		SHAFT, Idler, 36"	Basil A6036-213	–	–	1	
10		SET SCREW, 3/8 – 16 UNC		12	12	12	

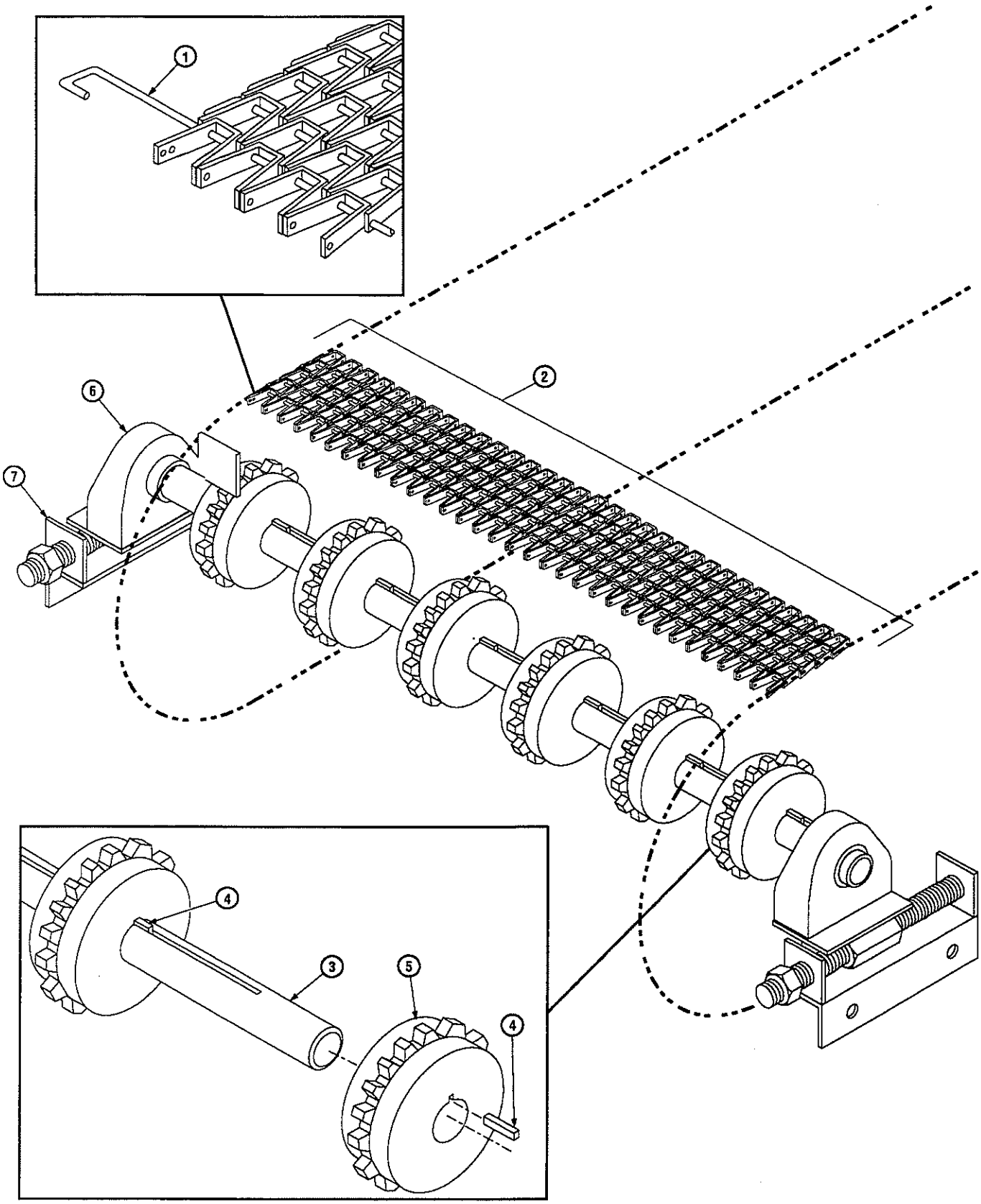

Figure 19. Conveyor Belt

Conveyor Belt

Call AMSCO Customer Service to Order Parts: 1-800-333-8848

ITEM NUMBER	PART NUMBER	DESCRIPTION	MANUFACTURER AND NUMBER	UNITS PER ASSEMBLY			
		UNITS WITH 24" CONVEYOR BELT		X			
		UNITS WITH 30" CONVEYOR BELT			X		
		UNITS WITH 36" CONVEYOR BELT				X	
1		ROD, 11 Ga. x 24"	Cambridge 1 x 1 x 24" 11 Ga. S/S	1	–	–	
		ROD, 11 Ga. x 30"	Cambridge 1 x 1 x 30" 11 Ga. S/S	–	1	–	
		ROD, 11 Ga. x 36"	Cambridge 1 x 1 x 36" 11 Ga. S/S	–	–	1	
2		BELTING	Cambridge 1 x 1 x 24" 11 Ga. Rod S/S	1	–	–	
		BELTING	Cambridge 1 x 1 x 30" 11 Ga. Rod S/S	–	1	–	
		BELTING	Cambridge 1 x 1 x 36" 11 Ga. Rod S/S	–	–	1	
3		SHAFT, Idler, 24"	Basil A6024-213	1	–	–	
		SHAFT, Idler, 30"	Basil A6007-213	–	1	–	
		SHAFT, Idler, 36"	Basil A6036-213	–	–	1	
4		KEY STOCK	Basil B6007-233	6	6	6	
5		SPROCKET, Belt	Basil B6007-232 REF: Cambridge #230000580 UHMW, 6" Dia., 18T., Class "C"	6	6	6	
6	910006-650	BEARING, Pillow Block, 1-1/2" Bore	McGill #TBC-25	2	2	2	
7		ASSEMBLY, Take Up	Basil C6007-116	2	2	2	

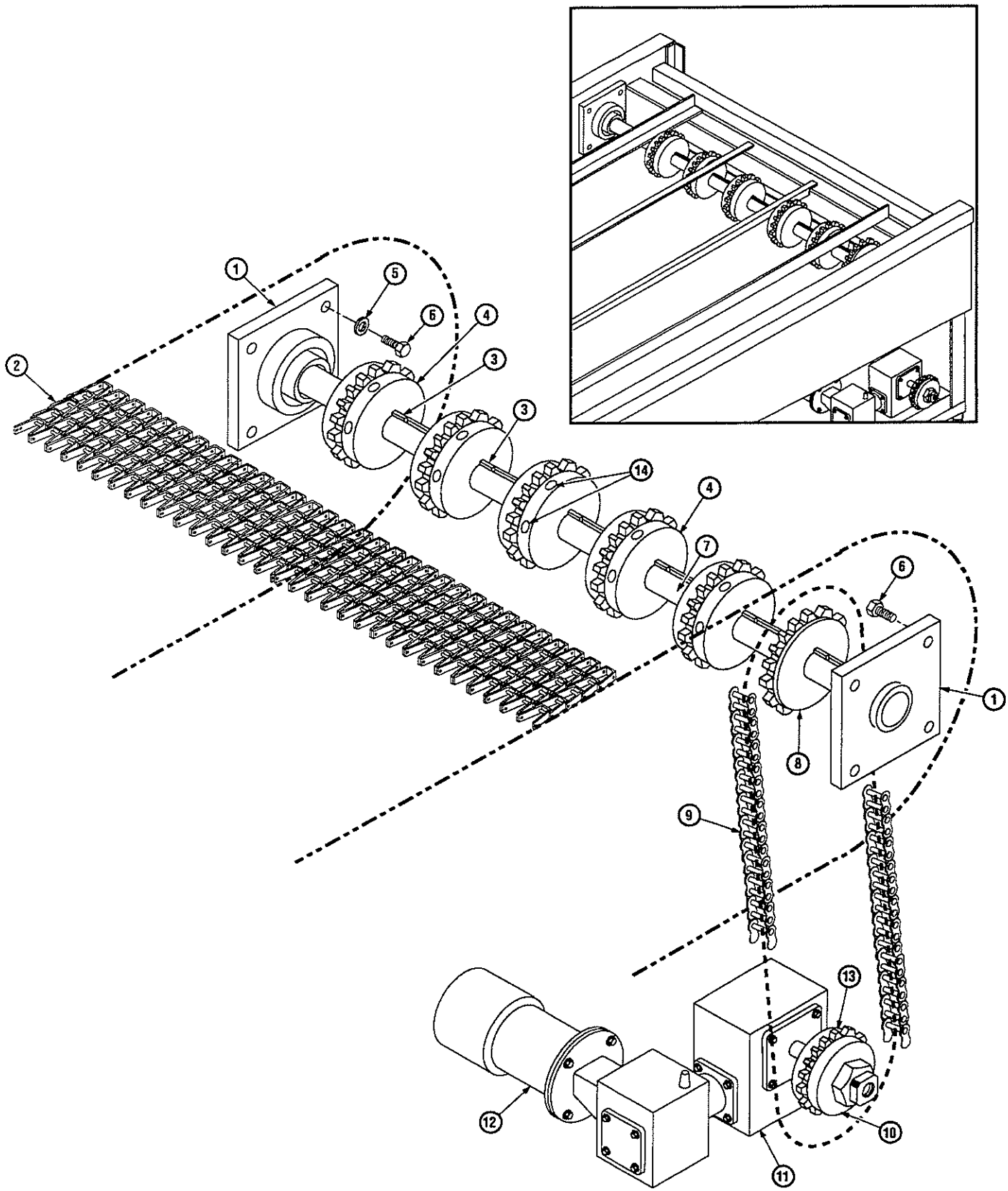

Figure 20. Unload End Conveyor Drive Assembly

Unload End Conveyor Drive Assembly

Call AMSCO Customer Service to Order Parts: 1-800-333-8848

ITEM NUMBER	PART NUMBER	DESCRIPTION	MANUFACTURER AND NUMBER	UNITS PER ASSEMBLY			
		UNITS WITH 24" CONVEYOR BELT		X			
		UNITS WITH 30" CONVEYOR BELT			X		
		UNITS WITH 36" CONVEYOR BELT				X	
1		BEARING	McGill FC4-25 x 1-1/2"	2	2	2	
2		BELTING	Cambridge 1 x 1 x 24" 11 Ga. Rod S/S	1	-	-	
		BELTING	Cambridge 1 x 1 x 30" 11 Ga. Rod S/S	-	1	-	
		BELTING	Cambridge 1 x 1 x 36" 11 Ga. Rod S/S	-	-	1	
3		KEY STOCK	Basil A6007-233	6	6	6	
4		SPROCKET, Belting	Basil B6007-270 REF: Cambridge #230000580	6	6	6	
5		LOCK WASHER, 1/2"		8	8	8	
6		BOLT, Hex Head, 1/2 – 20 x 1" Lg		8	8	8	
7		SHAFT, Drive, 24"	Basil A6024-214	1	-	-	
		SHAFT, Drive, 30"	Basil A6007-214	-	1	-	
		SHAFT, Drive, 36"	Basil A6036-214	-	-	1	
8		SPROCKET, 1-1/2" Bore	Browning #4030	1	1	1	
9	764324-366	CHAIN, #40, 134 Pitches	Browning #40 Riveted	1	1	1	
	764324-364	■ LINK, Master	Browning #40 Master Link	1	1	1	
	764324-365	■ LINK, Offset	Browning #40 Offset Link	1	1	1	
10	764324-321	CLUTCH, 1" Dia Keyed/Bored	Dalton #OSD-337, 1"	1	1	1	
11	910008-912	GEAR BOX, 400:1	Ohio Gear #DB-MC-2206/2133 Assy "A", Assy "B"	1	1	1	
12	910006-323	MOTOR, Drive, 1/3 HP, TEFC 56C, 1800 RPM	US Motor #G637	1	1	1	
13	910006-290	SPROCKET	Dalton #40A25G	1	1	1	
14		SET SCREW, 3/8 – 16 x 3/8" Lg		12	12	12	

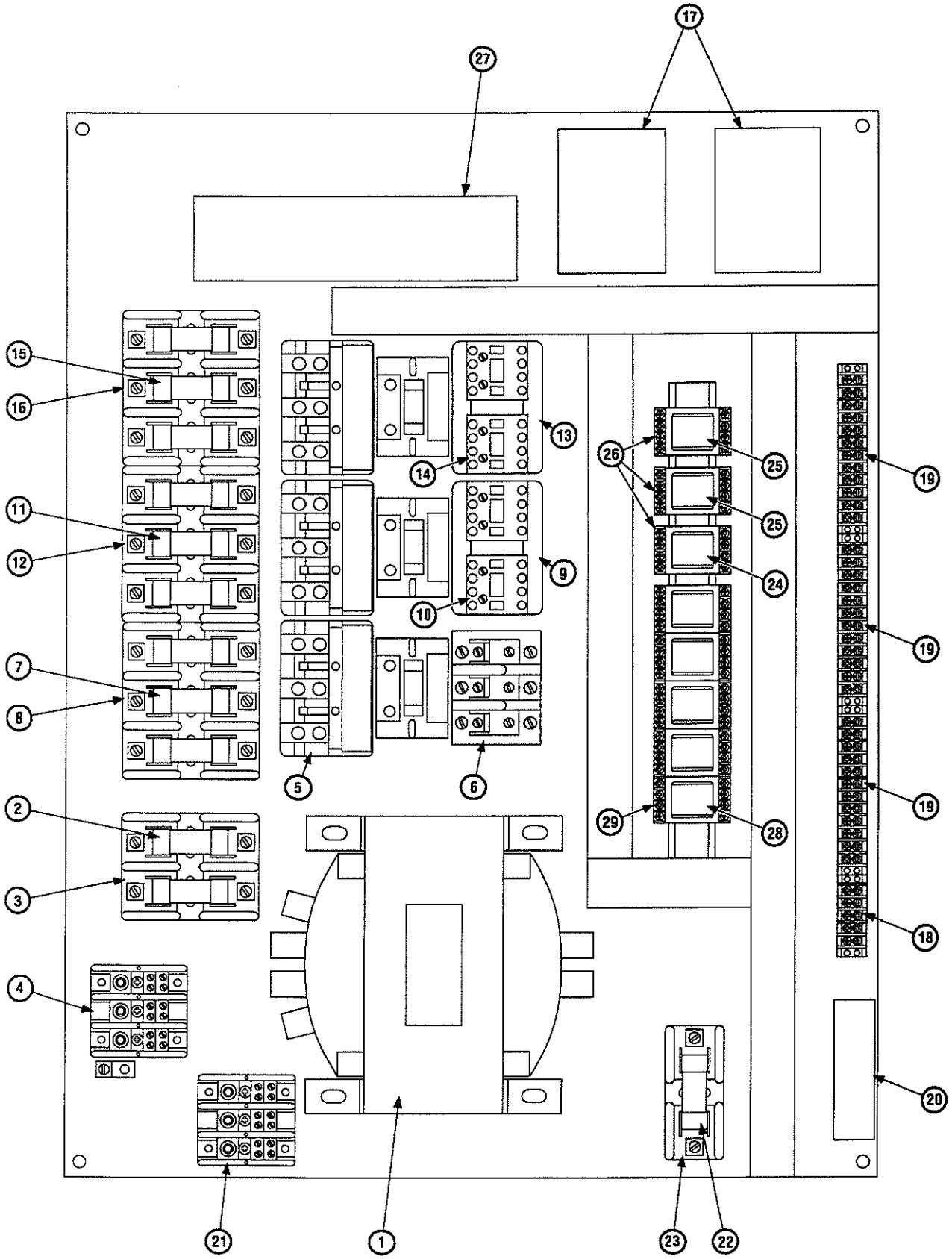

Figure 21. Electro-mechanical Control

Electro-mechanical Control

Call AMSCO Customer Service to Order Parts: 1-800-333-8848

ITEM NUMBER	PART NUMBER	DESCRIPTION	MANUFACTURER AND NUMBER	UNITS PER ASSEMBLY			
1	910006-127	TRANSFORMER, 1/60/120-208V	Heviduty #Y1500	1			
2	910006-060	FUSE, Transformer	Buss LPJ-15SP	3			
3	910006-044	FUSE BLOCK, Transformer	Buss J60030-2CR	1			
4	910008-227	POWER TERMINAL BLOCK, Three Pole	Marathon #1403401	1			
5	910008-480	MOTOR STARTER, Wash Pump	Allen Bradley 509-COD	1			
6	910006-041	HEATER, Motor Starter, Wash Pump	Allen Bradley W64	3			
7	910006-066	FUSE, Wash Pump	Buss LPJ-45SP	3			
8	910006-045	FUSE BLOCK, Wash Pump	Buss J60060-3CR	1			
9	117950-263	MOTOR STARTER, Rinse Pump	Allen Bradley 509-AOD	1			
10		HEATER, Motor Starter, Rinse Pump	Allen Bradley W51	1			
11	910006-061	FUSE, Rinse Pump	Buss LPJ-17-1/2SP	3			
12	910006-045	FUSE BLOCK, Rinse Pump	Buss J60030-3CR	1			
13	117950-191	MOTOR STARTER, Dryer Blower	Allen Bradley 509-BOD	1			
14		HEATER, Motor Starter, Dryer Blower	Allen Bradley W51	3			
15	910006-063	FUSE, Dryer Blower	Buss LPJ-25SP	3			
16	910006-045	FUSE BLOCK, Dryer Blower	Buss J60030-3CR	1			
17	764324-508	CONTROL, Water Level, Wash/Rinse	Warrick #1G1D0	2			
18	910006-099	TERMINAL STRIP, 5 Position	Marathon #105	1			
19	910006-100	TERMINAL STRIP, 12 Position	Marathon #112	3			
20	764324-310	CONTROL, Variable Speed, 1/2 HP, 120V	Minarik #MM23001C	1			
21	910006-098	TERMINAL BLOCK	Marathon #1604	1			
22		FUSE, Circuit	Buss JJS-30	1			
23	910006-648	FUSE BLOCK, Circuit	Buss J60030-1CR	1			
24	910008-561	TIMER, Backflush	Eagle #84Q2A605	1			
25	910008-580	TIMER, Fill, Wash/Rinse	Eagle #80Q2A609	2			
26		RELAY SOCKET, Control, 8 Pin	Allen Bradley 700-HN125	3			
27	764324-482	TIMER, CTM	Raychron C11	1			
28		RELAY, Control	Allen Bradley 700-HA32A1	5			
29		RELAY SOCKET, Control, 8 Pin	Allen Bradley 700-HN125	5			
	764324-509	ELECTRODE, Level Control, Wash/Rinse (Not Shown)	Warrick #3H1C00310	2			
	764324-507	ELECTRODE BOOT, Level Control, Wash/Rinse (Not Shown)	Warrick #3Z2A	2			

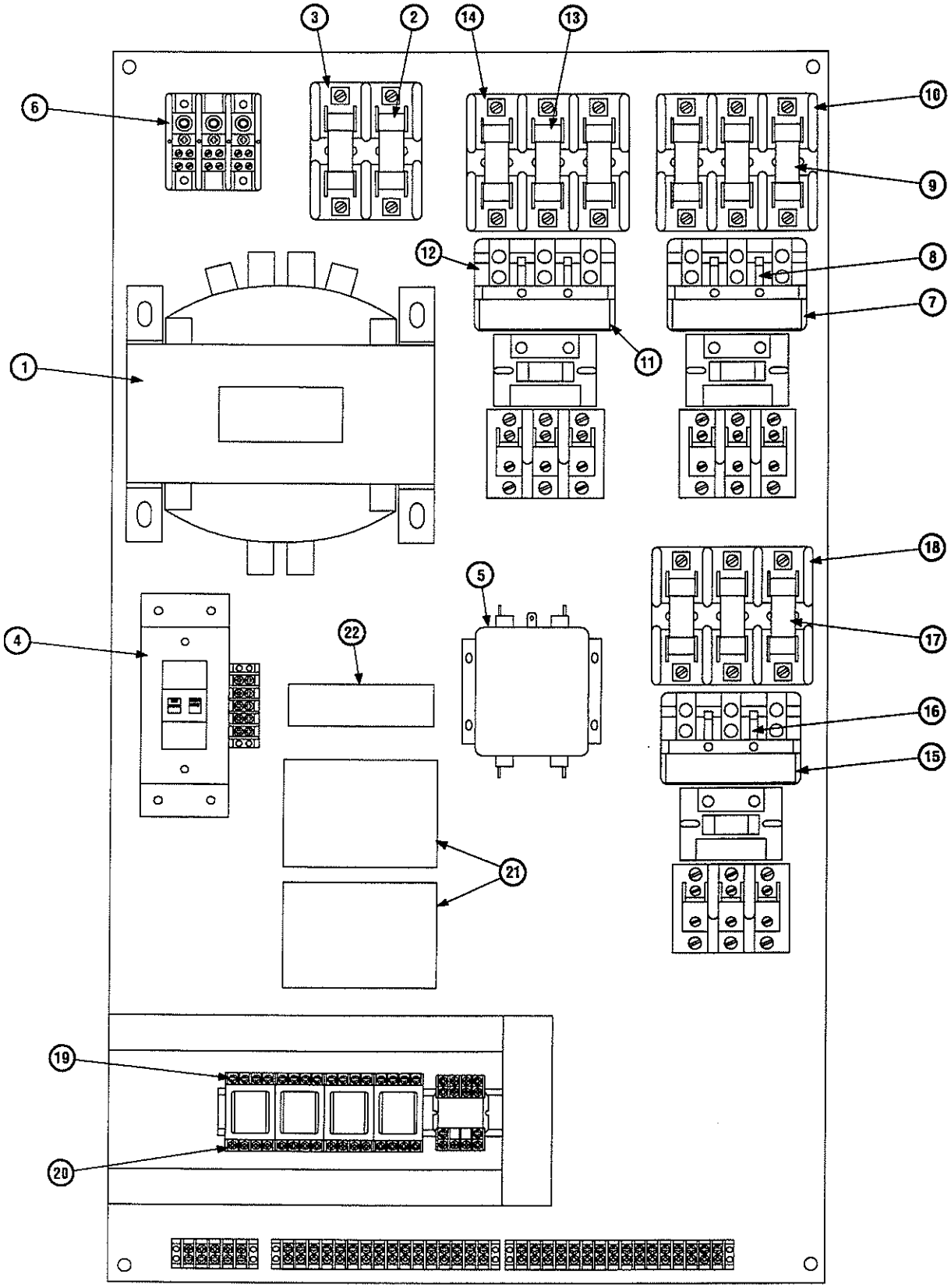

Figure 22. 3000 Control Column Assembly – Electrical Box

3000 Control Column Assembly – Electrical Box

Call AMSCO Customer Service to Order Parts: 1-800-333-8848

ITEM NUMBER	PART NUMBER	DESCRIPTION	MANUFACTURER AND NUMBER	UNITS PER ASSEMBLY			
1	910006-129	TRANSFORMER, 1/60/120-208V	Heviduty #Y1500, Type SZO	1			
2		FUSE, Transformer	Buss LPJ-5-6/10SP	2			
3	910006-044	FUSE BLOCK, Transformer	Buss J60030-2CR	1			
4	910006-085	GROUND FAULT INTERUPTER	Hubbel GF5350-I	1			
5	910008-566	POWER FILTER	Corcom Type 20VR1, Newark 81F4559	1			
6	910006-097	POWER TERMINAL BLOCK, Three Pole	Marathon #1423570	1			
7	117950-091	MOTOR STARTER, Wash Pump	Allen Bradley 509-BOD	1			
8	910006-037	HEATER, Motor Starter, Wash Pump	Allen Bradley W53	3			
9	910006-062	FUSE, Wash Pump	Buss LPJ-20SP	3			
10	910006-045	FUSE BLOCK, Wash Pump	Buss J60030-3CR	1			
11	117950-263	MOTOR STARTER, Rinse Pump	Allen Bradley 509-AOD	1			
12	910006-035	HEATER, Motor Starter, Rinse Pump	Allen Bradley W43	3			
13	910006-057	FUSE, Rinse Pump	Buss LPJ-8SP	3			
14	910006-045	FUSE BLOCK, Rinse Pump	Buss J60030-3CR	1			
15	117950-263	MOTOR STARTER, Dryer Blower	Allen Bradley 509-AOD	1			
16	117950-104	HEATER, Motor Starter, Dryer Blower	Allen Bradley W48	3			
17	910006-059	FUSE, Dryer Blower	Buss LPJ-12SP	3			
18	910006-045	FUSE BLOCK, Dryer Blower	Buss J60030-3CR	1			
19	910006-121	RELAY, Control, 120V DPDT	Potter Brumfield KRPA-11AG-120	4			
20	910006-122	RELAY SOCKET, Control, 8 Pin	Potter Brumfield 27E891	4			
21	764324-508	CONTROL, Water Level, Wash/Rinse	Warrick #1G1D0	2			
22	764324-310	CONTROL, Variable Speed, 1/3 HP, 120V	Minarik #MM23001A	1			
	764324-509	ELECTRODE, Level Control, Wash/Rinse (Not Shown)	Warrick #3H1C00310	2			
	764324-507	ELECTRODE BOOT, Level Control, Wash/Rinse (Not Shown)	Warrick #3Z2A	2			

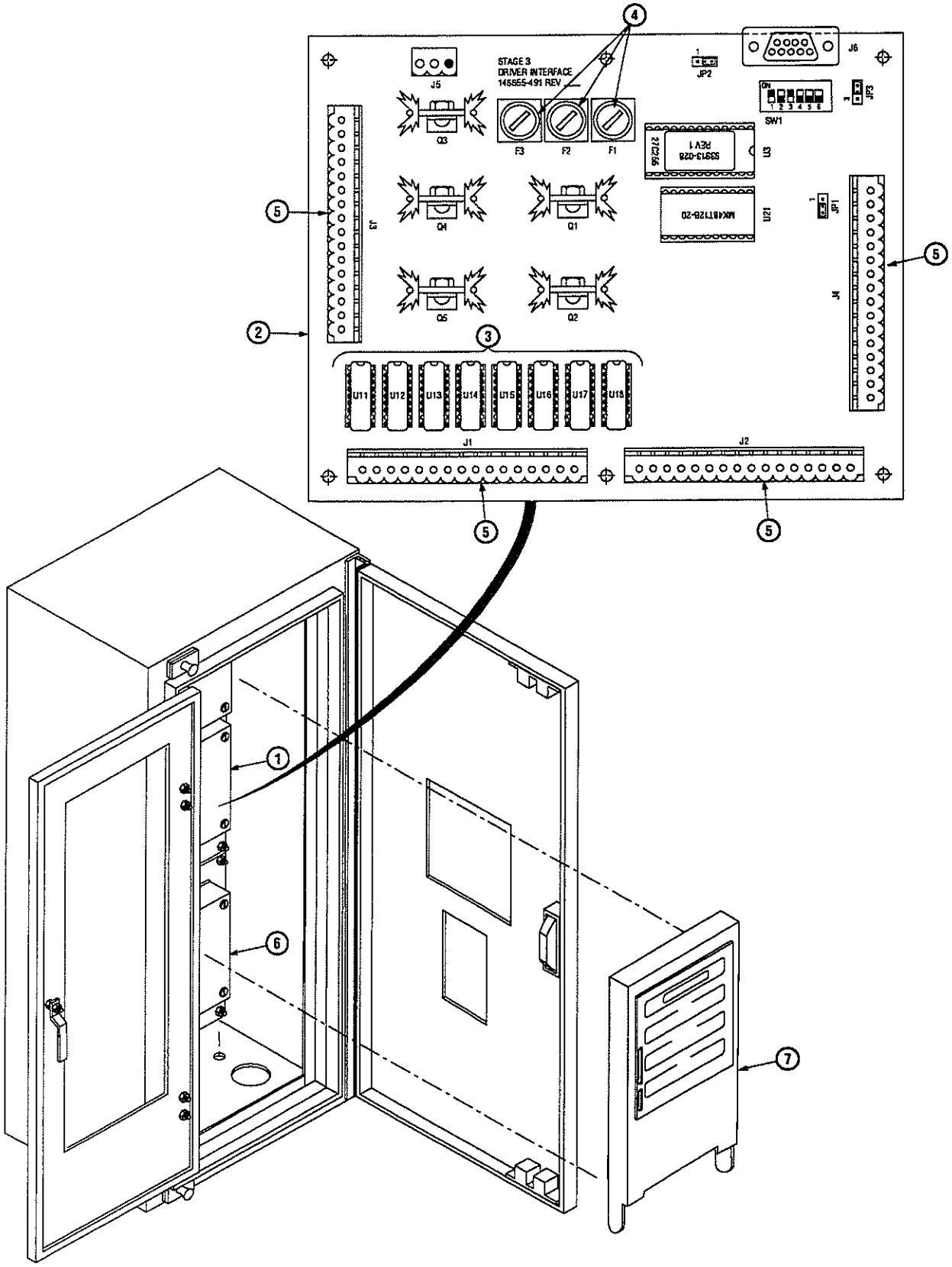

Figure 23. 3000 Control Column Assembly – Control Box

3000 Control Column Assembly – Control Box

Call AMSCO Customer Service to Order Parts: 1-800-333-8848

ITEM NUMBER	PART NUMBER	DESCRIPTION	MANUFACTURER AND NUMBER	UNITS PER ASSEMBLY			
1	910081-005	I/O BOX ASSEMBLY		2			
2	146655-491	I/O BOARD		2			
3	129361-870	RELAY, Solid State, Replaceable		8			
4	129361-869	FUSE, 7A – 250V		3			
5	129362-634	PLUG, 16 Position		4			
6	146659-026	BOARD, pH – Optional		1			
7		PRINTER/DISPLAY PANEL ASSEMBLY (Part 1 of 2) (see Figure 25)		1			
	910006-193	KIT, pH		A/R			
	910006-189	■ BUFFER, 4 pH					
	910006-190	■ BUFFER, 10 pH					
	910006-077	■ pH TEST PAPER					

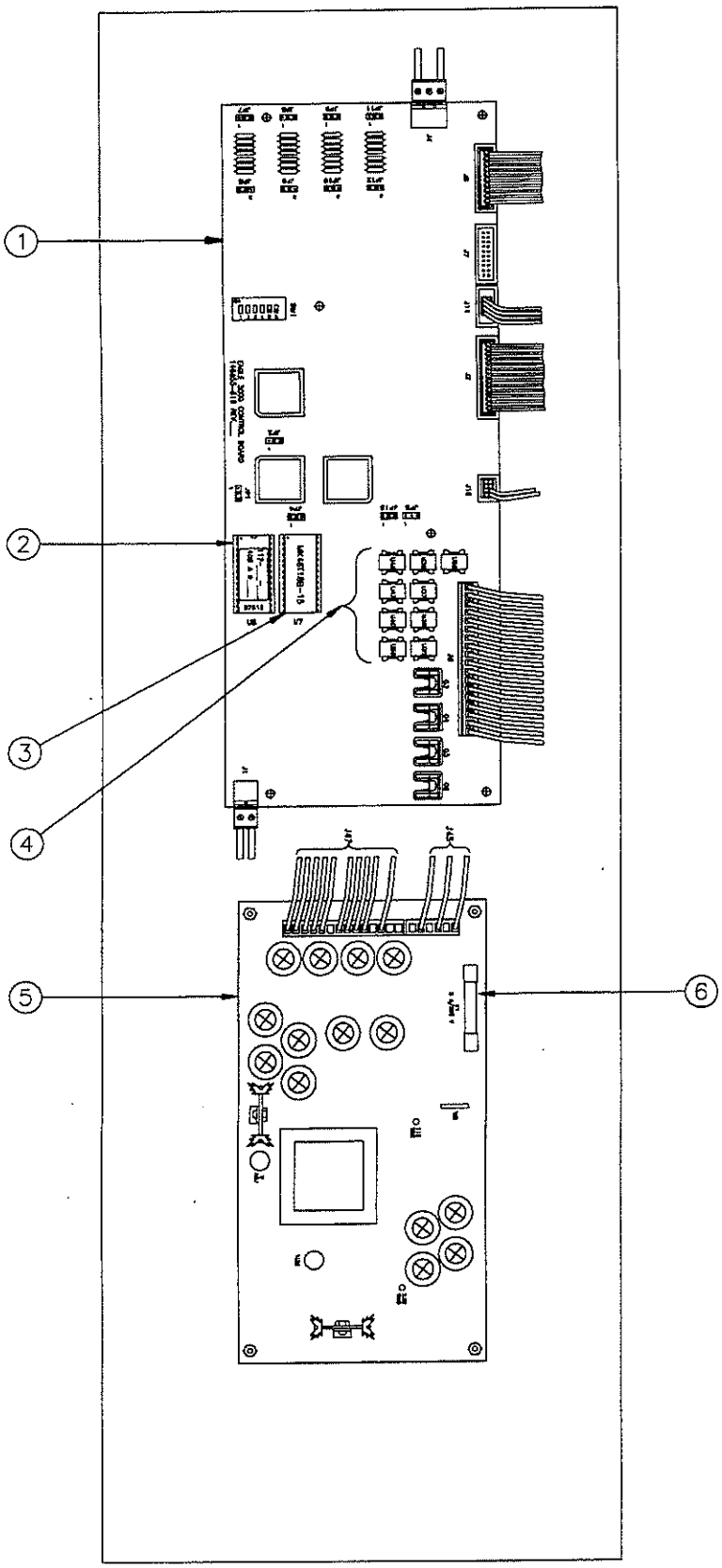

Figure 24. Control PC Board, Power Supply and Connector Board

Control PC Board, Power Supply and Connector Board

Call AMSCO Customer Service to Order Parts: 1-800-333-8848

ITEM NUMBER	PART NUMBER	DESCRIPTION	MANUFACTURER AND NUMBER	UNITS PER ASSEMBLY			
1	146655-819	BOARD, Control PC		1			
2		EPROM	Latest Revision by Serial Number	1			
3	129362-145	RAM, Battery Backed-Up		1			
4	129360-770	DRIVER, 300 MA		9			
5	93910-541	SUPPLY, Power		1			
6	129352-019	FUSE, 3A, 250V		1			

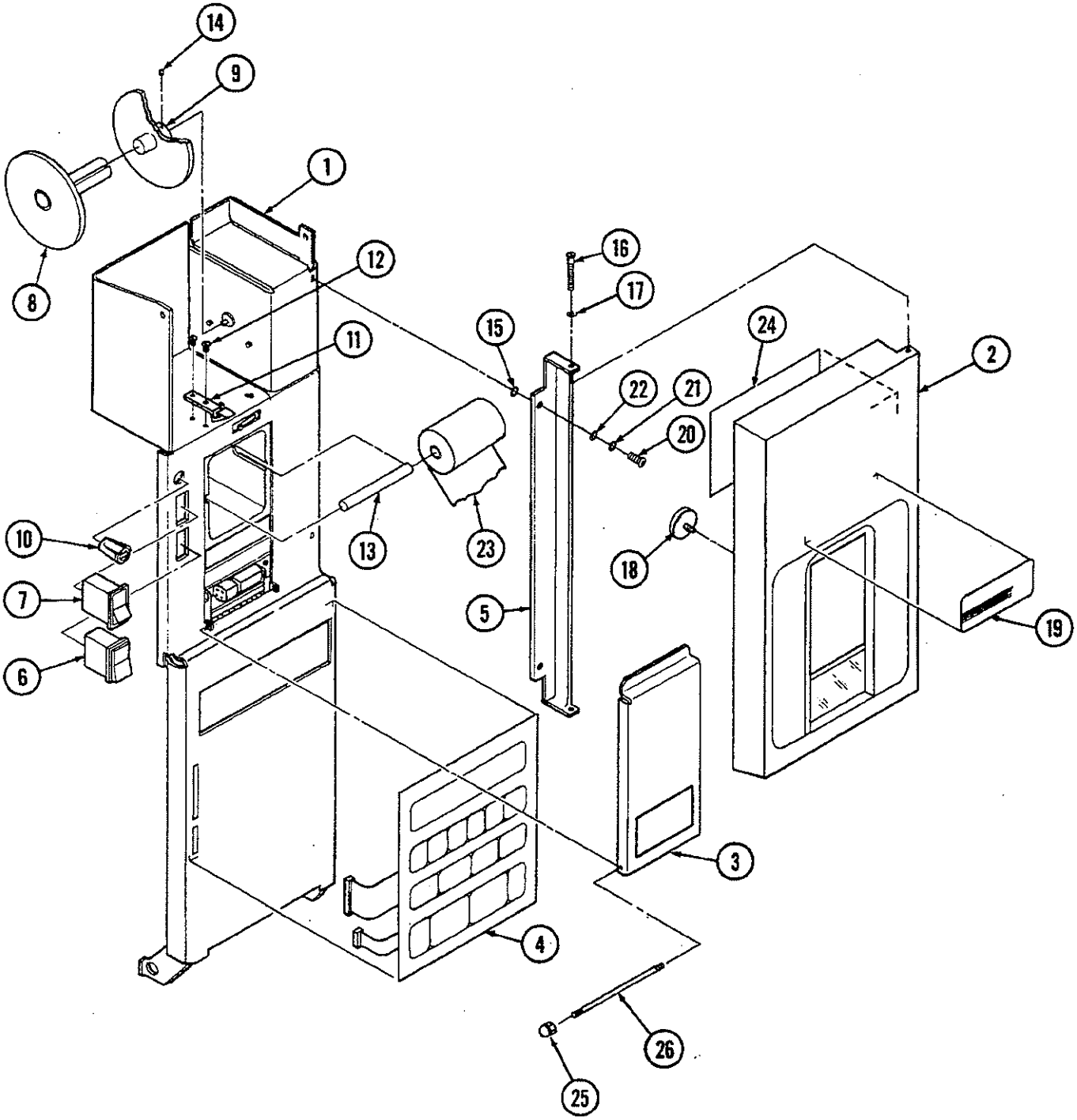

Figure 25. Printer/Display Panel Assembly (Part 1 of 2)

Printer/Display Panel Assembly (Part 1 of 2)

Call AMSCO Customer Service to Order Parts: 1-800-333-8848

ITEM NUMBER	PART NUMBER	DESCRIPTION	MANUFACTURER AND NUMBER	UNITS PER ASSEMBLY			
1	146655-746	BRACKET, Mounting		1			
2	146653-226	DOOR, Printer Access		1			
3	93908-482	PLATEN		1			
4	136806-193	PANEL, Touch		1			
5	136806-411	BAR, Hinge		1			
6	93908-901	SWITCH, Printer Function	Dreefs 236J0B1X	1			
7	93902-846	SWITCH, Control	Little Fuse 33516-001-91	1			
8	93910-248	SPOOL		1			
9	93910-250	STUD, Spool		1			
10	129356-001	CATCH, Magnetic	South Co. 02-20-411-10	1			
11	129360-448	CLIP		1			
12	93908-031	SCREW, Sems, 4 – 40 x 1/4"		8			
13	129357-884	SHAFT, Paper		1			
14	93908-031	SCREW, Set, 6 – 32 x 3/16"		1			
15	19677-041	LOCK WASHER, #10		2			
16	129359-489	SCREW, Shoulder, 4 – 40 x 1/8 x 29/64"		4			
17	129139-002	WASHER, Flat, Fiber		2			
18	93909-376	STRIKE		1			
19	129362-135	NAMEPLATE, Stage 3		1			
20	129359-461	SCREW, Button HD, 10 – 32 x 1/2"		2			
21	129352-069	NUT, Retaining, 10 – 32		2			
22	5511-041	WASHER, Flat, #10		2			
23	129359-008	PAPER, Roll (Box of 5 rolls)		1			
24	93908-516	PLATE, Instruction		1			
25	150828-190	NUT, Press Black		2			
26	150828-189	ROD, Platen		1			

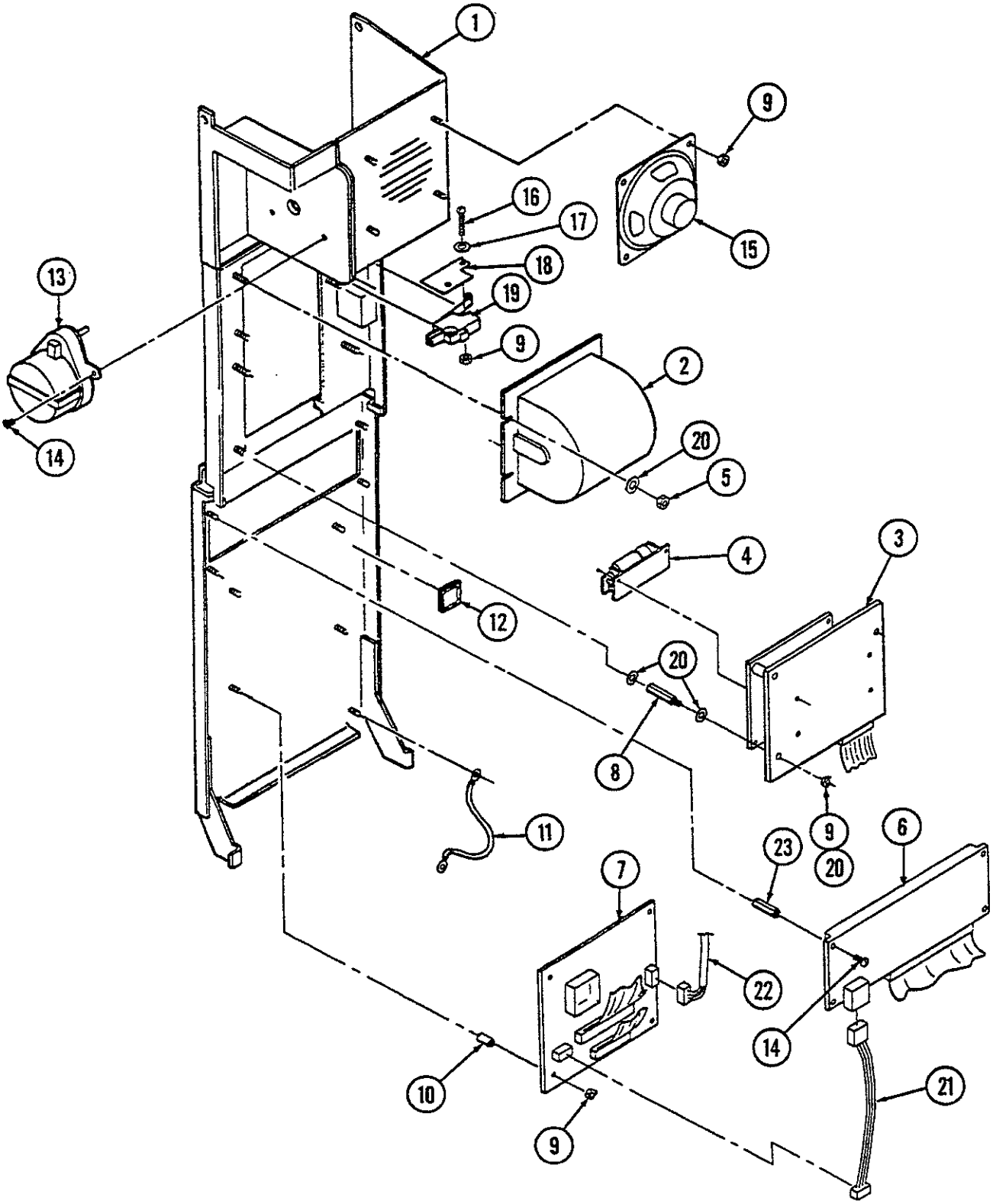

Figure 26. Printer/Display Panel Assembly (Part 2 of 2)

Printer/Display Panel Assembly (Part 2 of 2)

Call AMSCO Customer Service to Order Parts: 1-800-333-8848

ITEM NUMBER	PART NUMBER	DESCRIPTION	MANUFACTURER AND NUMBER	UNITS PER ASSEMBLY
1	146655-352	BRACKET, Mounting		1
2	136800-949	HOUSING, Paper		1
3	93910-531	PRINTER ASSEMBLY, with Printer		1
4	755716-005	PRINTER, with Cable		1
5	84121-002	NUT, Keps, 6 – 32		4
6	93908-435	DISPLAY	Futaba M2025D08FJ	1
7	146655-598	PC BOARD, Interface		1
8	129361-678	STAND-OFF, 6 – 32 x 1"		3
9	84121-001	NUT, Keps, 4 – 40		12
10	129360-821	SPACER		4
11	93909-399	WIRE, Ground		1
12	129326-001	MOUNT, Wire Tie		3
13	93909-399	GEAR, Motor	Crouzet Cont. 82344	1
14	93908-031	SCREW, Sems, 4 – 40 x 1/4"		8
15	56401-535	SPEAKER		1
16	90993-091	SCREW, Round HD, 4 – 40 x 3/4"		2
17	26032-091	WASHER, Flat, #4		2
18	90124-091	INSULATOR, Switch		1
19	129359-463	SWITCH, Micro	Micro Switch V3L-2103-D8	1
20	84114-002	WASHER, Flat #6		10
21	93910-546	CONNECTOR ASSEMBLY		1
22	136807-690	CABLE ASSEMBLY, P67		1
23	129361-676	STAND-OFF, 4 – 40 x 7/16"		4

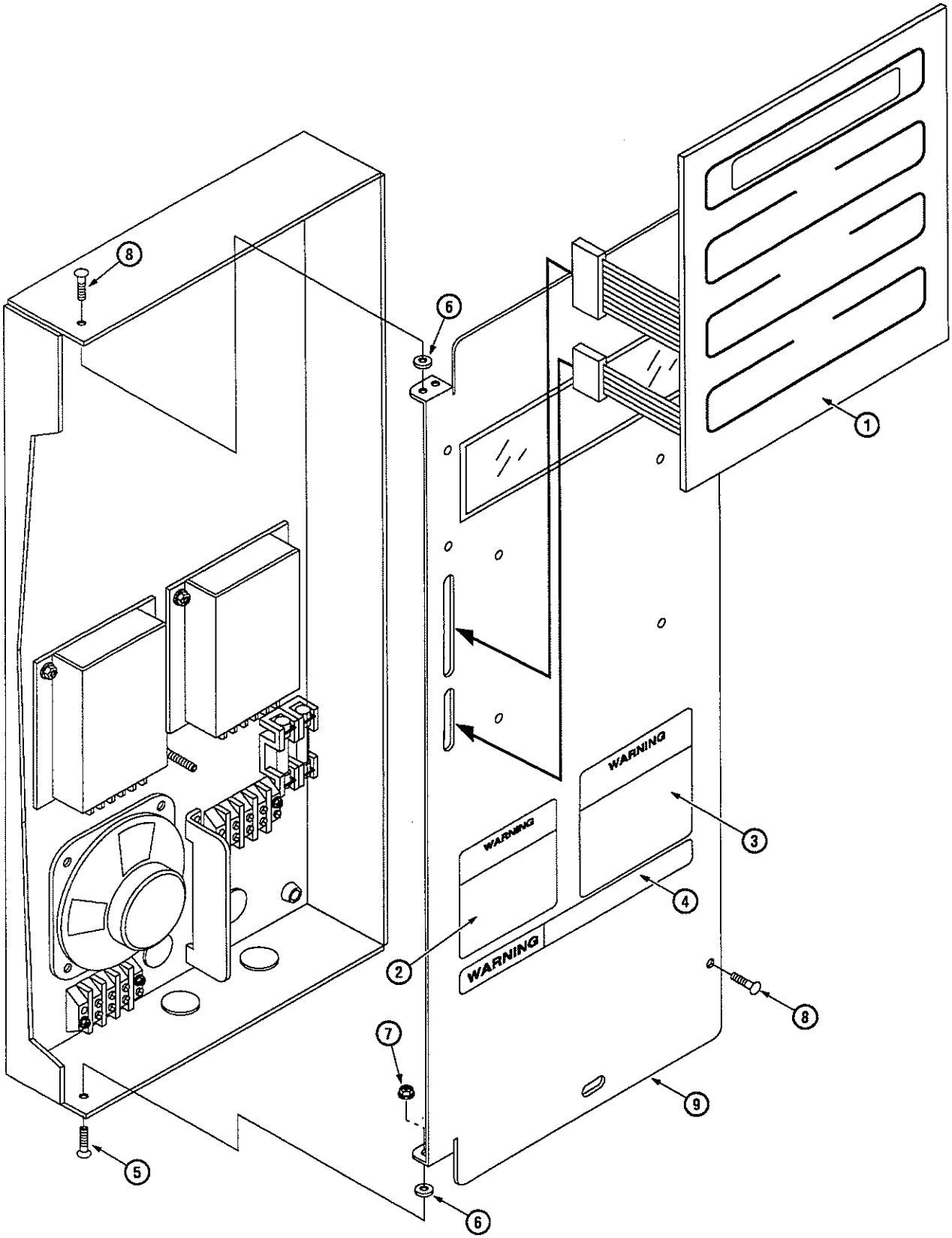

Figure 27A. 3000 Remote Control Inner Panel – Front View

3000 Remote Control Inner Panel – Front View

Call AMSCO Customer Service to Order Parts: 1-800-333-8848

ITEM NUMBER	PART NUMBER	DESCRIPTION	MANUFACTURER AND NUMBER	UNITS PER ASSEMBLY			
1	136806-193	PANEL, Touch		1			
2	150369-001	DECAL, WARNING – SHOCK HAZARD		1			
3	150371-001	DECAL, WARNING – MAIN POWER		1			
4	150367-001	DECAL, WARNING – FUSE RATING		1			
5	84120-001	SCREW, Flathead, 4 – 40 x 5/16" Lg		2			
6	150475-913	WASHER		2			
7	84121-001	NUT, Keps, 4 – 40		2			
8	129353-345	SCREW, Flathead, 8 – 32 x 7/8" Lg		2			
9		INNER PANEL – REAR VIEW (see Figure 27B)					

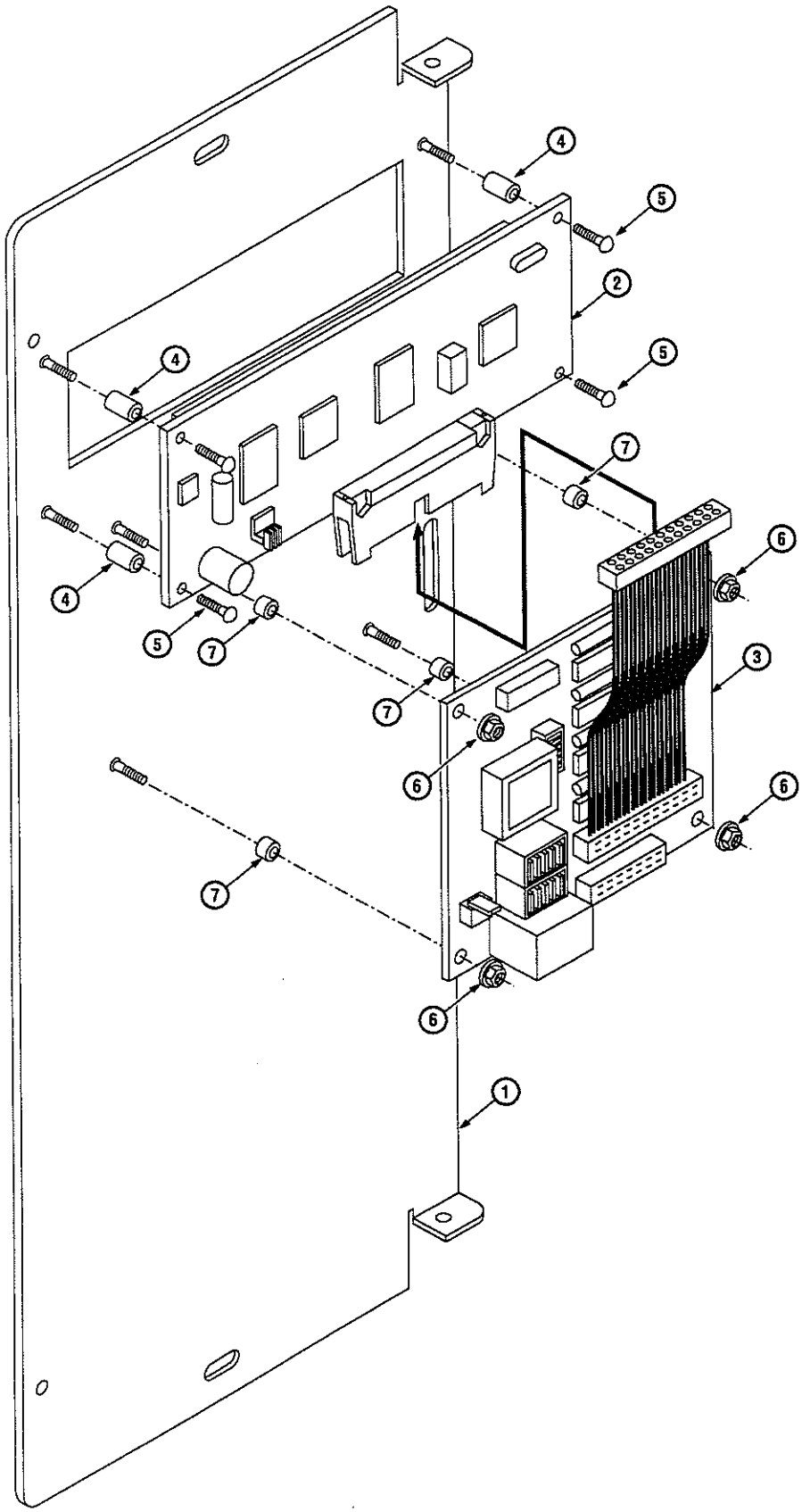

Figure 27B. 3000 Remote Control Inner Panel – Rear View

3000 Remote Control Inner Panel – Rear View

Call AMSCO Customer Service to Order Parts: 1-800-333-8848

ITEM NUMBER	PART NUMBER	DESCRIPTION	MANUFACTURER AND NUMBER	UNITS PER ASSEMBLY			
1	910081-021	PANEL, Inner		1			
2	93908-435	DISPLAY, Vacuum	Futaba Inc. M202SD08FJ	1			
3	146655-598	BOARD, Interface		1			
4	129361-676	STANDOFF, 4 – 40		4			
5	93908-031	SCREW, Sems, 4 – 40		4			
6	84121-001	NUT, Keps, 4 – 40		4			
7	129360-821	SPACER		4			

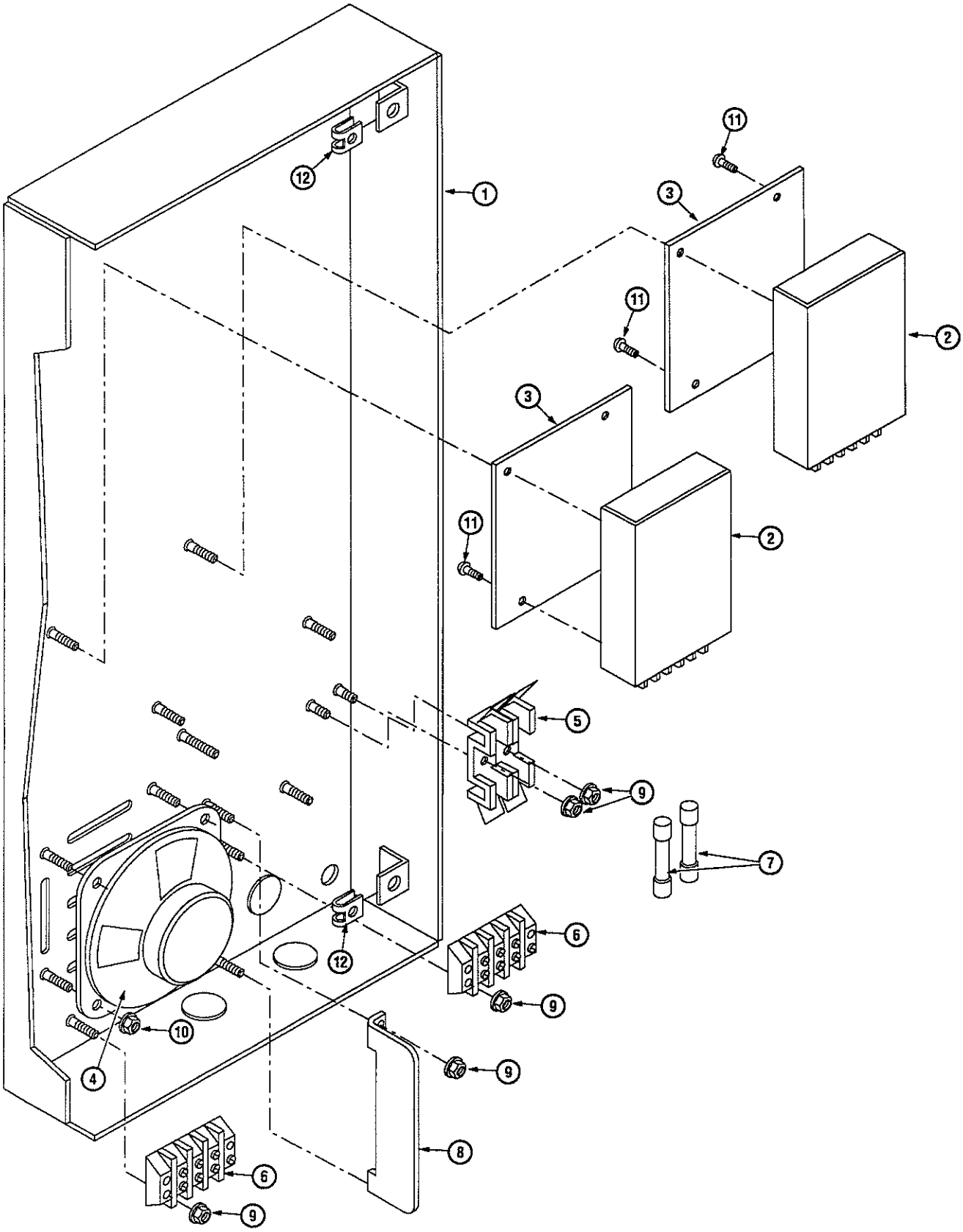

Figure 28. 3000 Remote Control – Rear View

3000 Remote Control – Rear View

Call AMSCO Customer Service to Order Parts: 1-800-333-8848

ITEM NUMBER	PART NUMBER	DESCRIPTION	MANUFACTURER AND NUMBER	UNITS PER ASSEMBLY			
1	93910-898	HOUSING, Control		1			
2	93910-925	SUPPLY, Power	Kepco FMP5-2K	2			
3	129361-989	PLATE, Mounting		2			
4	56401-535	SPEAKER	Quam-Nichols 30C25Z8	1			
5	93902-778	BLOCK, Fuse	Little Fuse 354-802-GY	1			
6	90699-091	BLOCK, Terminal	Marathon 103-SP	2			
7	764317-462	FUSE, 1A	Little Fuse 313-3AG	2			
8	129362-413	BRACKET, Barrier		1			
9	84121-001	NUT, Keps, 4 – 40		10			
10	84121-002	NUT, Keps, 6 – 32		4			
11	93908-031	SCREW, Sems, 4 – 40 x 1/4" Lg		10			
12	910000-002	NUT, Speed, 8 – 32		2			